LASER MEASUREMENT AND CONTROL

Product Catalog

COHERENT®

Superior Reliability & Performance

Operational Excellence

Operational Experience You Can Count On

For over 40 years, Coherent has been supplying you with the best laser measurement and beam diagnostic equipment available. We realize that while technical specifications greatly influence your purchasing decisions, you also must consider many other important criteria. Through customer surveys we found that Product Reliability, Speed of Responsiveness, and Technical Support are the three top criteria when choosing a laser test and measurement supplier. That's why we place as much emphasis on Operational Excellence as we do on technical superiority. Operational Excellence means:

- **Overall product warranty rate <1%**
- **Calibration turnaround time <5 days**
- **On-time delivery for all new orders >95%**
- **Shipment of C24 orders within 24 hours**

For Product Reliability, Speed of Responsiveness, and Technical Support, make the safe choice you can always count on Coherent.

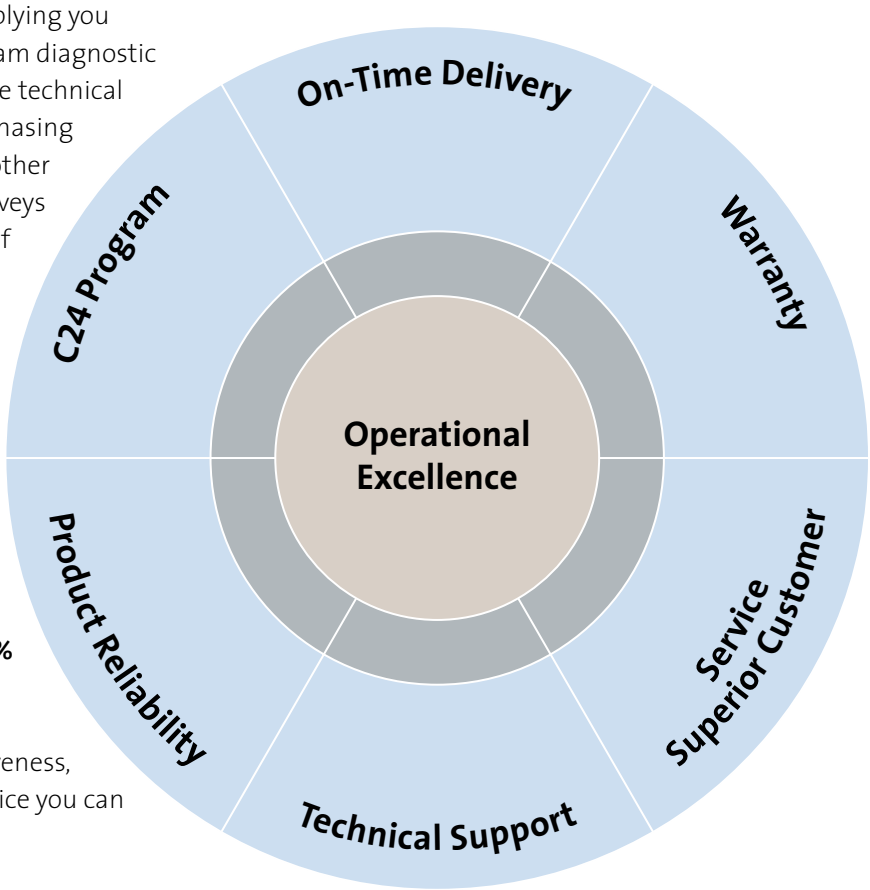

Coherent C24 Quick Ship Program

Items in the catalog with the C24 icon next to the part number are in our C24 Quick Ship program.

Orders that exclusively contain C24 items are eligible for next business day shipment from the manufacturing site in Wilsonville, Oregon.

Laser Measurement and Control

Table of Contents

New Products

New Products	4

Power and Energy Meters

Power and Energy Measurement Solutions	5-7
Power and Energy Meter Quick Reference Guide	8
Compatibility Chart for Our Most Popular Meters and Sensors	9
LabMax-Pro SSIM	10-13
LabMax-Pro Mobile App	14-15
LabMax Meters	16-18
FieldMaxII Meters	19-20
FieldMate	21
LaserCheck	22
LMC System Kits and Meter Accessories	23

Power Sensors

Introduction and Selection Charts	24
Long-Pulse Energy Measurement with a Thermopile	25
PowerMax-Pro (Transverse Thermoelectric) Technology	26-28
PowerMax-Pro 150W Sensors	29-30
PowerMax-Pro kW Sensors	31-32
PowerMax-Pro HP Sensors	33-34
PowerMax-Pro USB/RS Sensors	35-37
PowerMax-USB/RS Sensors	38-55
PowerMax-USB/RS Sensor Accessories	56
Power Sensor Summary Specifications (standard DB-25 LM and PM models)	57-58
LM Model Beam Position Sensing Thermopile Sensors (10 mW to 5 kW)	59-62
High-Sensitivity Optical Power Sensors (10 nW to 50 mW)	63
PM Model Thermopile Sensors (100 µW to 5 kW)	64-69
PM Model Large Area High Power Water-Cooled Thermopile Sensors (10 mW to 5 kW)	70
PM Model High Peak Power Thermopile Sensors (10 mW to 30W)	71
PM Model Thermopile Sensors with UV Coating (10 mW to 1 kW)	72-75
Power Sensor Accessories	76-77

Laser Measurement and Control

Table of Contents

Energy Sensors

EnergyMax Introduction and Selection Charts	78-83
EnergyMax-USB/RS Sensors Product Overview	84-85
EnergyMax-USB/RS Sensors	86-92
EnergyMax Sensors - Standard DB-25	93-99
EnergyMax Accessories	100-101
Measuring Energy with an Oscilloscope	102
J100 Energy Sensor	103

Custom and OEM

Custom and OEM Products Introduction	104
OEM Thermopiles (10 mW to 1 kW)	105-106
OEM Thermopile Detailed Drawings	107

Beam Diagnostics

Introduction to Laser Beam Diagnostics	108-109

Beam Diagnostic Cameras

LaserCam-HR II	110
LaserCam-HR II UV	110
LaserCam-HR-InGaAs	111

BeamView-USB Analyzer Software

BeamView-USB	112-117

Beam Diagnostic Accessories

Laser Grade Attenuation Optics for Cameras	118
Attenuation Optics for Cameras	119
Extreme-UV Beam Intensity Profile Optics	120

BeamMaster

Knife-Edge Based Beam Profilers	121-122
BeamMaster Accessories	123

Laser Measurement and Control

Table of Contents

ISO 17025, Calibration, Warranty and Service 124-125

Measurement Products for Use with Coherent Lasers 126-129

Model Name Index 130-131

How to Contact Us 132

Doing Business with Coherent 133

Notes 134

New Products

New to the Catalog

POWER & ENERGY
Power & Energy Meters
PowerMax-Pro Sensors
USB/RS Power Sensors
DB-25 Power Sensors
USB/RS Energy Sensors
DB-25 Energy Sensors
Custom & OEM
BEAM DIAGNOSTICS
CALIBRATION & SERVICE
Laser Cross-Reference Index
Model Name Index

PowerMax-Pro kW

Features

- Very fast 20 µsec response time
- Measures high average power to 3 kW
- Large 30 mm active area
- Less than 1% back reflection
- QBH adapter available for Class 1 measurement

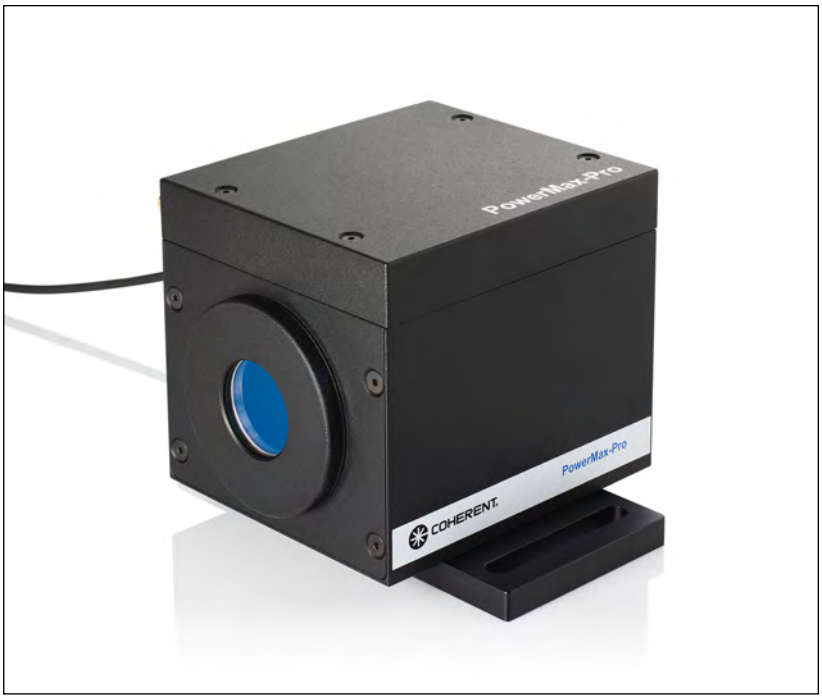

PowerMax-Pro kW Sensor (page 31)

PowerMax-Pro BB Sensors

Features

- Measures power in tens of microseconds
- High power up to 200 W
- Supports lasers from Visible to Far-IR wavelengths
- Capable of tracing the individual pulse shape of modulated and long pulse lasers
- Large 30 x 30 mm active area

PowerMax-Pro BB Sensor (page 29, 30, 36)

Power and Energy Measurement Solutions

Sensor Technologies

Coherent offers four different sensor technologies (PowerMax-Pro, thermopile, semiconductor/optical, and pyroelectric) that address a broad range of measurement parameters and laser characteristics.

PowerMax-Pro

Coherent developed PowerMax-Pro technology (Patent #9,012,848) to meet the growing need for a laser power sensor that offers the broad wavelength sensitivity, large dynamic range and high damage resistance of a thermopile, together with the fast response speed approaching that of a semiconductor photodiode.

The PowerMax-Pro is constructed and configured differently than a thermopile. Specifically, in this device the heat flows vertically through the detector, and the electrical field that is generated moves perpendicular to the heat flow. The materials used in this sensor are a stack of films which have layer thicknesses on the order of microns. Incident laser light is absorbed and generates heat which is able to flow very quickly through these thin layers to the heat sink below the detector where it is dissipated. The electrical signal from the thin film layers moves laterally to the edges of the device where it can be measured by tapping into the sensor electrodes.

PowerMax-Pro - Laser Power Sensors

In contrast to the traditional, radial flow thermopile, which has a sensing time constant value of several seconds, the time constant for the thin film configuration is in the microsecond range. This enables the sensor to provide an essentially instant power measurement without any overshoot and also enables pulse analysis of modulated lasers with pulses greater than 10 microseconds.

Pyroelectric

EnergyMax - Laser Energy Sensors

Coherent energy sensors use a pyroelectric element to measure the energy in a laser pulse. It does this by producing a large electrical charge for a small change in temperature. The active sensor circuit takes the current from the sensor element and converts it to a voltage that can be measured by a peak detector circuit or a Coherent meter. Pyroelectrics can only be used with pulsed lasers.

Pyroelectric sensors are ideal for measuring the output of pulsed lasers. These devices can be used at repetition rates to 10 kHz and beyond, and can be used to measure laser pulses beyond a Joule.

Power and Energy Measurement Solutions

Sensor Technologies

POWER & ENERGY
Power & Energy Meters
PowerMax-Pro Sensors
USB/RS Power Sensors
DB-25 Power Sensors
USB/RS Energy Sensors
DB-25 Energy Sensors
Custom & OEM
BEAM DIAGNOSTICS
CALIBRATION & SERVICE
Laser Cross-Reference Index
Model Name Index

Thermopile

PM Model Thermopiles

LM Model Thermopiles

Thermopile sensors are a great all-purpose technology suitable for many lasers. They are used for measuring CW laser power, average power in pulsed lasers, and are often used to integrate the energy of long pulses.

Thermopile sensors absorb incident laser radiation and convert it into heat. This heat ultimately flows to a heat sink that is held at ambient temperature by either convection-cooling or water-cooling. The temperature difference between the absorber and the heat sink is converted into an electrical signal by a thermocouple junction.

Thermopiles operate across a wide range of input powers, and unlike a semiconductor sensor they will not saturate. The spectral range is dependent upon the coating applied to absorb the laser energy. The coating used on many thermopiles is broadband in nature and is relatively flat from the ultraviolet through the infrared. These sensors have natural response times on the order of several seconds for a low power sensor and up to one minute for a kilowatt sensor. When combined with a Coherent meter a speed-up algorithm provides a much faster response – on the order of seconds for most sensors.

Coherent has two lines of thermopile sensors. The "LM Model" line utilizes a unique thermopile disk in which the thermocouples are split into four quadrants, allowing the sensors to provide beam position information in addition to power measurement. The "PM Model" line incorporates traditional thermopile disks that provide power measurement.

Quad Positioning Enabled

Semiconductor/Optical

Semiconductor sensors convert incident photons into current that can be measured by our instruments. The photodiodes used in these types of sensors offer high sensitivity and low noise, enabling them to detect very low light levels. Attenuating filters must be used when operating above the milliwatt level because they saturate above approximately 1W/cm^2.

Photodiodes are also convenient for tuning and peaking lasers due to their fast response time. The spectral range is more limited than our other sensor technologies. These devices are also referred to as optical sensors. Semiconductor/optical sensors are limited to measuring CW laser power.

Model OP-2/LM-2

Power and Energy Measurement Solutions

Sensor Technologies

Sensor Technology Measurement Range

The following information can help determine which sensor technology to choose based upon the type of laser used and the type of measurement needed.

Laser Type	Measurement Needed	Power Range	Wavelength Range	Sensor Type
CW Laser	Average Power	10 nW to 50 mW 100 µW to >5 kW	250 nm to 1800 nm 0.19 µm to 11 µm	Optical Thermopile
CW Laser	Instant Average Power	50 mW to 150W	300 nm to 11 µm	PowerMax-Pro
Pulsed Laser	Average Power	100 µW to >5 kW	0.19 µm to 11 µm	Thermopile
Pulsed Laser	Instant Average Power	50 mW to 350W	300 nm to 11 µm	PowerMax-Pro
Pulsed Laser	Energy Per Pulse	100 nJ to >10J	0.19 µm to 11 µm	Pyroelectric
Long Pulse Laser (>1 ms)	Single Pulse Integrated Energy	1 mJ to >300J	0.19 µm to 11 µm	Thermopile
Long Pulse Laser (>10 µs)	Pulse Visualization	<15 kW peak power	300 nm to 11 µm	PowerMax-Pro

The spectral range of these sensor technologies and absorbing coatings are shown in the table below. After identifying a sensor type and coating, the detailed specifications in this catalog can be used to select a specific sensor model for your application.

	Model	Wavelength (nm)
Thermal Sensors	PowerMax - UV Coating	150 to 1000
	PowerMax - Broadband Coating	190 to 11,000
	Volume Absorber	250 to 3000
Semiconductor Sensors	UV	200 to 400
	VIS	400 to 1064
	IR	800 to 1800
Energy Sensors	MaxBlack Coating	190 nm 12,000
	MaxUV Coating	190 to 2100
	Diffuse Metallic Coating	190 to 2100
PowerMax-Pro	HD Coating	355 to 1100 nm; 9 to 11 µm

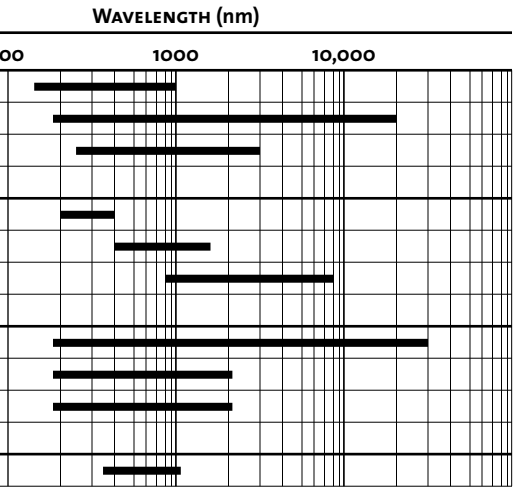

After selecting a sensor model, the final step is to identify a meter to measure, display and analyze the sensor output. The information on the next page summarizes the capabilities and features of our meters and lists their compatibility with different sensors. Visit www.Coherent.com/LMC and use our Product Finder to assist you in making your sensor and meter selections.

Power and Energy Meter Quick Reference Guide

Meter Features Summary Table

	FieldMate	FieldMaxII -TOP	FieldMaxII -TO	FieldMaxII -P	LabMax -Pro SSIM	LabMax -TOP	LabMax -TO	LaserCheck
Page Reference	21	19	19	19	10	16	16	22
Measurement Modes								
CW Power	•	•	•		•	•	•	•
Avg. Power of Pulsed Lasers	•	•	•		•	•	•	
Long-Pulse Joules		•			•	•	•	
Pulse Energy		•		•		•		
Max. Rep. Rate (Hz)		300		300		10,000[1]		
Display Types								
Digital Readout	•	•	•	•	•[2]	•	•	•
Analog Needle Tuning	•							
Graphical Tuning		•	•	•	•[2]	•	•	
Strip Chart/Trending					•[2]	•	•	
Measurement Analysis Supported								
Beam Position						•	•	
Statistics		•	•	•	•	•	•	
Display Smoothing		•	•	•	•	•	•	
High Speed Power					•			
Correction Factors Supported								
Wavelength Correction	•	•	•	•	•	•	•	•
Attenuation Factor		•	•	•	•	•	•	
PC Interfaces								
USB		•	•	•	•	•	•	
RS-232					•	•	•	
GPIB						•[3]		
Analog Output	•	•	•	•	•	•	•	
Electrical Power Options								
Battery (rechargeable)		•	•	•		•	•	
Battery (non-rechargeable)	•							•
AC Powered	•	•	•	•	•	•	•	

Meter and Sensor Compatibility Table

Power Sensors								
PM Model	•	•	•		•	•	•	
PS Model	•	•	•		•	•	•	
OP-2 Model	•	•	•		•	•	•	
LM Model and BeamFinder	•[4]	•[4]	•[4]			•	•	
LM-2 Model	•[4]	•[4]	•[4]		•	•	•	
PowerMax-Pro	•	•	•		•	•	•	
Energy Sensors								
EnergyMax		•[5]		•[5]	•	•		

[1] 10,000 Hz sampled; 1000 Hz every pulse.
[2] Using PC software application.
[3] LabMax-TOP w/GPIB model only.
[4] Compatible when used with Thermal SmartSensor Adapter #1056827.
[5] Our J-50MT-10KHz, J-25MT-10KHz, J-10MT-10KHz, J-10Si, and J-10Ge EnergyMax Sensors are not compatible with FieldMaxII-TOP meters. For legacy sensor models not listed, please contact Coherent or your local representative for assistance.

Power and Energy Measurement Overview

Compatibility Chart for Our Most Popular Meters and Sensors

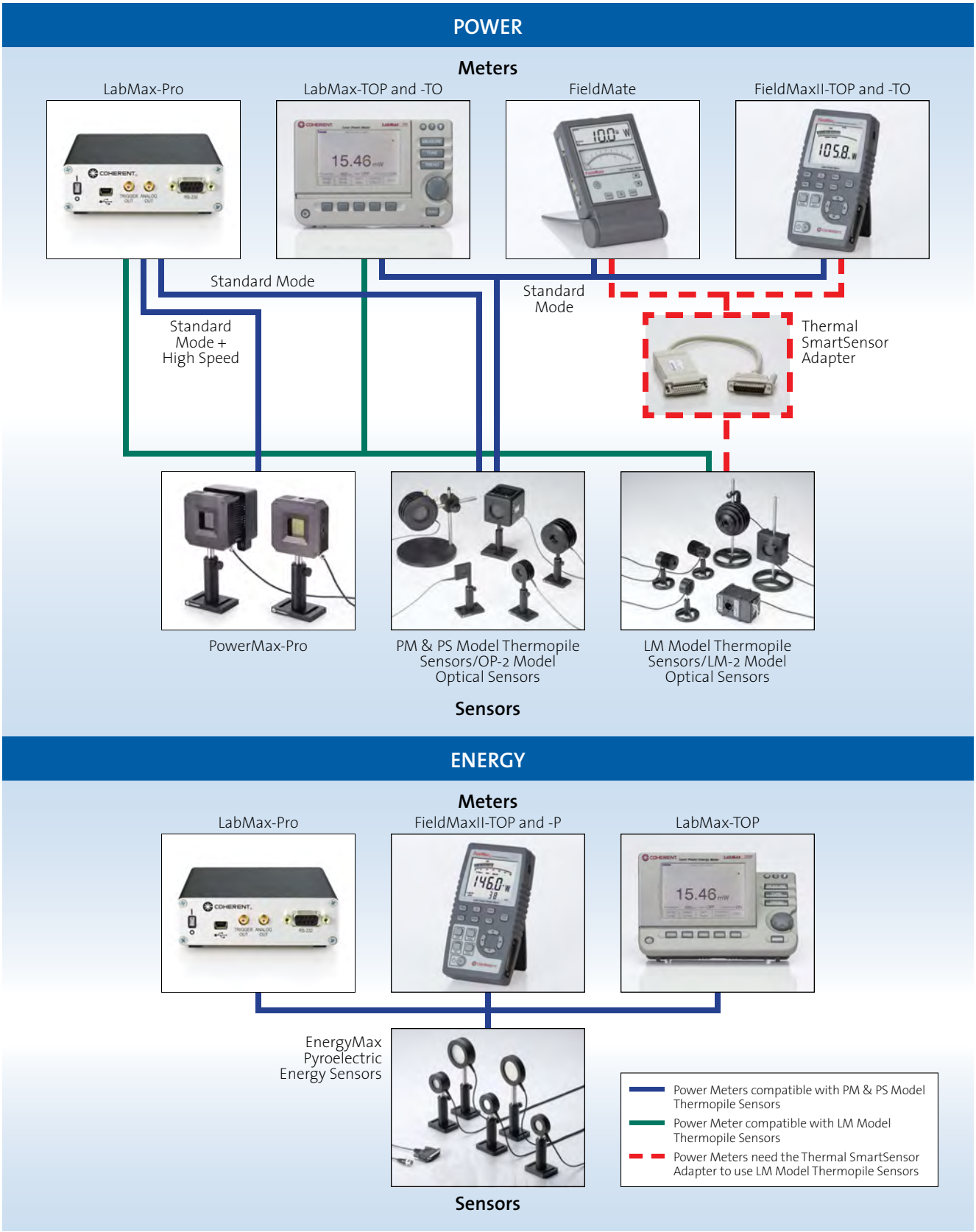

LabMax-Pro SSIM

Laser Power and Energy Meter

POWER & ENERGY
Power & Energy Meters
PowerMax-Pro Sensors
USB/RS Power Sensors
DB-25 Power Sensors
USB/RS Energy Sensors
DB-25 Energy Sensors
Custom & OEM
BEAM DIAGNOSTICS
CALIBRATION & SERVICE
Laser Cross-Reference Index
Model Name Index

LabMax-Pro SSIM Laser Power and Energy Meter

Features

- **Laser power and energy meter**
- **Compatible with PowerMax-Pro and PM Model thermopiles**
- **High speed sampling for laser pulse analysis**
- **USB and RS-232 interfaces**
- **Windows PC application**
- **Direct host commands support OEM integration**
- **Windows 7 and 8 compatible (32 and 64-bit)**
- **SSIM: Smart Sensor Interface Module**

The LabMax-Pro represents the next generation of Coherent's groundbreaking LabMax line. This power meter combines the power and versatility of the LabMax, with two new higher speed sampling modes when used with PowerMax-Pro technology. High speed mode increases the continuous sampling rate to 20 kHz, enabling analysis of laser pulse trains common in medical and microwelding applications. Snapshot mode provides burst sampling at a rate of 625 kHz, enabling users to view and analyze the temporal pulse trace of modulated lasers common in various commercial cutting, engraving and drilling applications.

In the traditional 10 Hz sampling mode, PowerMax-Pro sensors provide an instant power reading, much like a photodiode but at very high powers. Legacy thermopiles are also compatible with the 10 Hz sampling mode, just like in past meters.

The product includes a new Windows-based PC application that enables a wide range of analysis functions including statistics and histogram, trending, tuning, data logging, as well as a new ability to zoom in on detailed pulse shapes and pulse bursts using PowerMax-Pro technology. The software interface allows for flexible sizing of informational panes within the application, in which contents are auto-sized dynamically as the panes are adjusted, allowing the user to size the information of greatest importance.

Data is analyzed on the PC through USB or RS-232 interfaces through the Windows PC application, or directly through host commands. Since the LabMax-Pro interfaces via USB and utilizes Windows, the LabMax-Pro can be interfaced to tablets that operate on the Windows 8 platform. This unique capability gives users flexibility to display data and allow state-of-the-art color and touch screen displays.

In addition to PC interfacing, LabMax-Pro SSIM also includes an analog output with user-selectable voltages of 0 to 1V, 2V, or 4V. Triggering can be achieved with an external trigger input or an internal trigger that is user adjustable.

The meter is configured as a module for direct PC control and is compatible with PM model thermopiles and PowerMax-Pro sensors.

A sensor is just part of a measurement system, and can only deliver high quality data if it is matched with electronics to properly acquire, condition and process the raw signal from the sensor. Coherent has developed the LabMax-Pro SSIM laser power meter specifically to fully capitalize on the inherent capabilities of PowerMax-Pro sensors.

To minimize user cost and maximize flexibility, the LabMax-Pro is packaged as a Smart Sensor Interface Module (SSIM) that interfaces with a host computer through either USB or RS-232. LabMax-Pro PC, a new Windows PC application, then enables instrument control and displays measurement results, including laser tuning and pulse shape visualization, on a host computer. The software also performs a wide range

LabMax-Pro SSIM
Laser Measurement System

LabMax-Pro SSIM

Laser Power and Energy Meter

of analysis functions such as live statistics, histograms, trending and data logging. In addition, a complete set of host commands can be sent through either the USB or RS-232 interface which is particularly useful for embedded applications.

High Speed Sampling for Pulse Visualization
The standard operating mode of the LabMax-Pro SSIM utilizes a typical 10 Hz sampling rate. At this data rate, it allows PowerMax-Pro sensors to provide an instant power reading, much like a photodiode, but, of course, taking advantage of the sensor's ability to directly read very high powers. High volume processes that use high repetition rate or quasi-CW lasers, such as picosecond and femtosecond lasers, can benefit significantly from fast power measurements. Time currently spent monitoring the process with thermopiles can be spent processing parts, and with such rapid measurements, the process can be monitored more frequently. Instead of spending up to a minute or more taking a reading, the measurement can be performed in less than a second with PowerMax-Pro technology, enabling throughput improvement with very little engineering investment.

The standard operating mode is best used to measure the power of CW lasers, or the average power of high repetition rates lasers. Two High Speed sampling modes have been implemented in the meter electronics and software to fully exploit the rapid response speed of PowerMax-Pro sensors for measuring modulated lasers operating between these two extremes. These modes enable advanced analysis of high power, modulated lasers in a way that has never been possible before.

The first High Speed mode utilizes a continuous data sampling rate of 20 kHz, allowing pulse shape analysis of modulated lasers with repetition rates of up to 2 kHz. These types of pulse trains are common in many laser-based medical treatments and some materials processing applications such as micro welding.

The second High Speed mode is called "Snapshot Mode," which provides burst sampling at a rate of 625 kHz for a period of time up to 384 milliseconds. This is fast enough to enable visualization of the pulse shape of the modulated lasers common in various commercial cutting, engraving and drilling applications, as well as long pulses and pulse trains used in aesthetic medical applications. This type of temporal visualization offers new insight into the true performance of the laser previously masked by slow thermopiles.
This new informationIt provides developers with more repeatable methods to transfer processes from engineering to manufacturing and to control and monitor the process once it's up and running. Many thermal-based materials processing applications can be better controlled with this information, leading to faster processing with higher yield; at the same time, the quality of laser produced features can be enhanced.

The following figures demonstrate the data quality and high pulse shape fidelity that can be achieved:

Modulated 10.6 µm CO_2 Laser
- 10 µs PW
- 10 kHz PRF
- 10% Duty Cycle

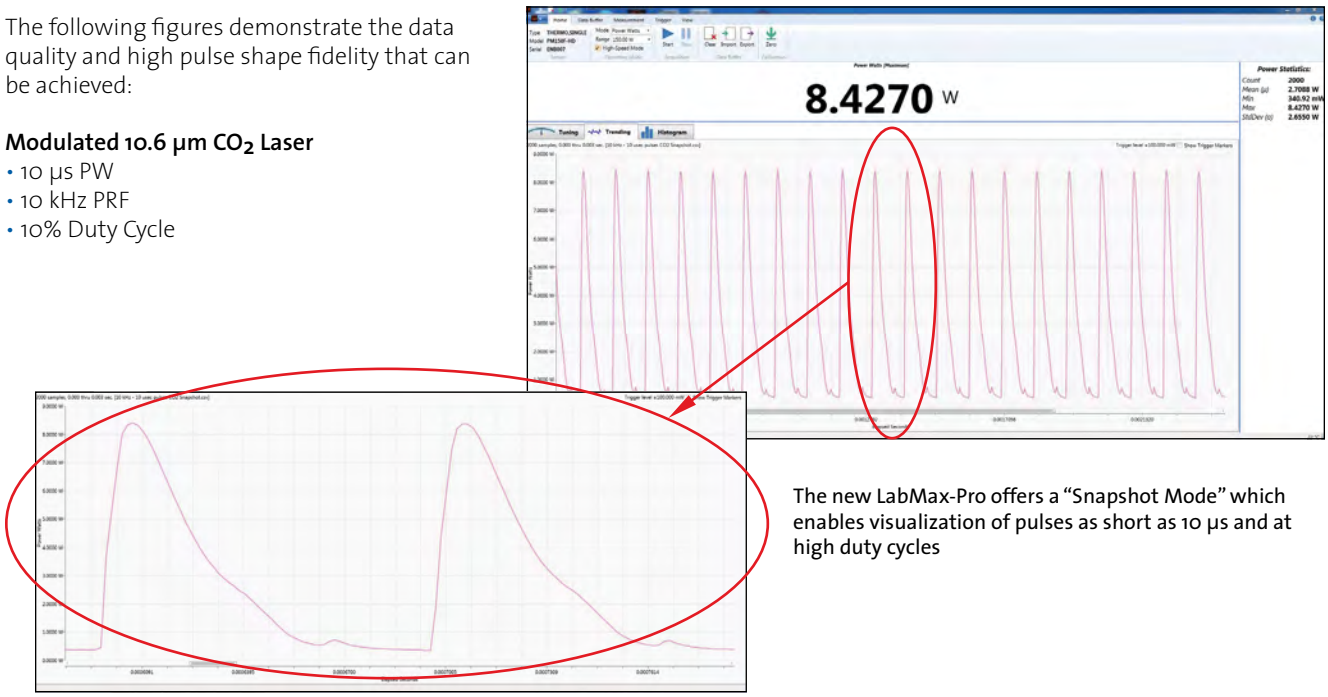

The new LabMax-Pro offers a "Snapshot Mode" which enables visualization of pulses as short as 10 µs and at high duty cycles

LabMax-Pro SSIM

Laser Power and Energy Meter

POWER & ENERGY
Power & Energy Meters
PowerMax-Pro Sensors
USB/RS Power Sensors
DB-25 Power Sensors
USB/RS Energy Sensors
DB-25 Energy Sensors
Custom & OEM
BEAM DIAGNOSTICS
CALIBRATION & SERVICE
Laser Cross-Reference Index
Model Name Index

Modulated 10.6 µm CO_2 Laser
- 50 µs PW
- 8 kHz PRF
- 40% Duty Cycle

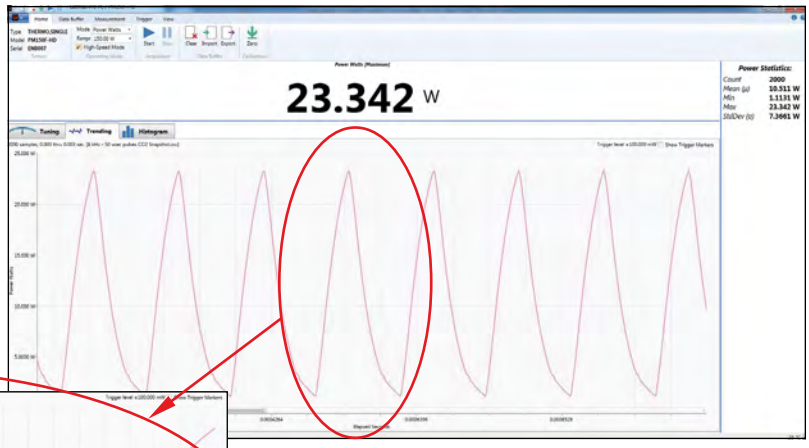

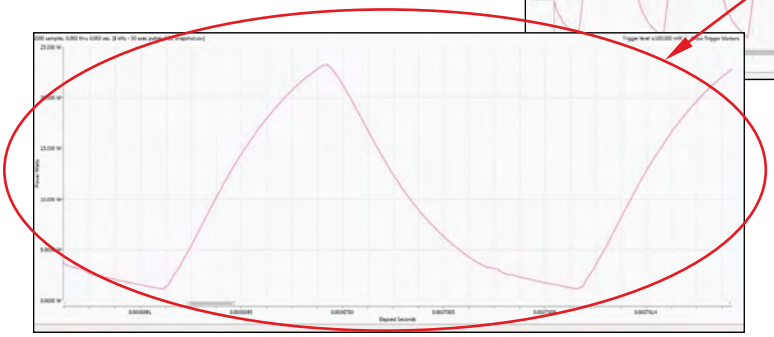

Pulse shape visualization obtained with a PowerMax-Pro sensor and LabMax-Pro electronics and software

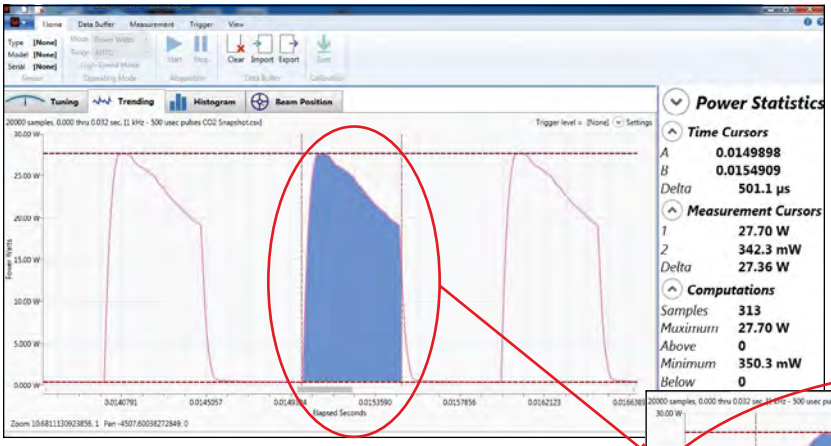

Modulated 10.6 µm CO_2 Laser
- 500 µs PW
- 1 kHz PRF
- 50% Duty Cycle

Pulse shape visualization obtained with a PowerMax-Pro sensor and LabMax-Pro electronics and software

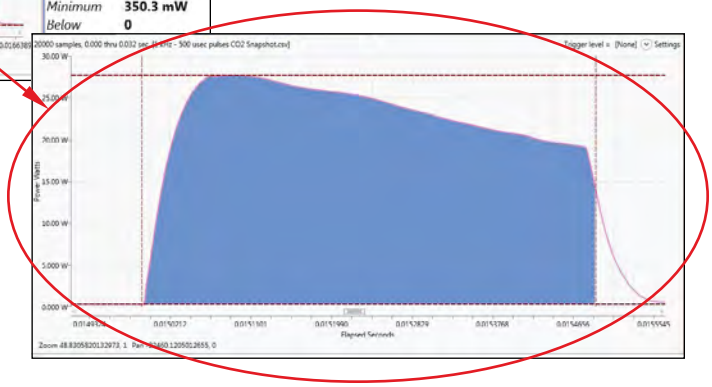

LabMax-Pro SSIM

Laser Power and Energy Meter

Device Specifications

ISO/IEC 17025:2005

AC-1630

Model	LabMax-Pro SSIM
Measurement Resolution (%)(full-scale)	
at 10 Hz speed	0.1
at 20 KHz high speed	0.2
Sensor Compatibility	PM Model Thermopile; PowerMax-Pro; LM Model Thermopile, OP-2 & LM-2 Optical, DB-25 EnergyMax pyroelectric
Measurement Range	Sensor dependent (reference sensor specifications)
Accuracy (%)	
Digital Meter	±1
System	Meter + sensor
Analog Output	±1
Calibration Uncertainty (%)(k=2)	±1
Power Sampling Rate (Hz)	
Thermopile	10
PowerMax-Pro - Low Speed	10
PowerMax-Pro - High Speed	20,000
PowerMax-Pro - Snapshot Mode	625,000
Pyroelectric	10,000
LM-2/OP-2 Optical	10
Analog Output (VDC)	0 to 1, 2, or 4 (selectable)
Analog Output Resolution (mV)	1
Analog Output Update Rate (kHz)	19
Measurement Analysis	Trending, tuning, histogram, data logging, statistics (min., max., mean, range, std. dev., dose, stability), pulse shape (with PowerMax-Pro in High Speed and Snapshot mode), long pulse Joules with thermopiles
Computer Interface	USB and RS-232
Pulse Triggering	Internal and External
Temperature	
Operating Range	5 to 40°C (41 to 104°F)
Storage Range	-20 to 70°C (-68 to 158°F)
Instrument Power (external supply)	90 to 260 VAC, 50/60 Hz
Compliance	CE, RoHS, WEEE
Dimensions	105 x 105 x 32 mm (4.1 x 4.1 x 1.3 in.)
Weight	0.3 kg (0.6 lbs.)
Front Panel	Power switch USB hi-speed port (mini B connector) Trigger output (SMB connector) Analog output (SMB connector) RS-232 port (DB-9F connector)
Rear Panel	DB-25 sensor port External trigger input (SMB connector, 3 to 5 Vin, 2 to 10 mA, 50 ohm AC, 300 ohm DC impedance) Power jack (12VDC - center positive)
Part Number[1,2]	1268881

[1] Meter supplied with AC power adapter, power cord, USB cable, trigger cable, software and driver CD, and certificate of calibration.
[2] OEM mounting and stacking hardware kit (Part Number 1268401) is available for purchase as an optional accessory.
** C24 Quick Ship program: eligible for next business day shipment.

LabMax-Pro SSIM

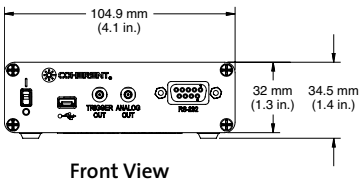

Front View

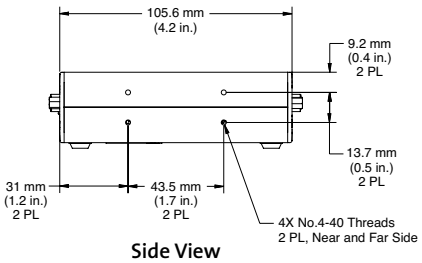

Side View

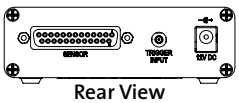

Rear View

LabMax-Pro Mobile App

For Mobile Devices

POWER & ENERGY
Power & Energy Meters
PowerMax-Pro Sensors
USB/RS Power Sensors
DB-25 Power Sensors
USB/RS Energy Sensors
DB-25 Energy Sensors
Custom & OEM
BEAM DIAGNOSTICS
CALIBRATION & SERVICE
Laser Cross-Reference Index
Model Name Index

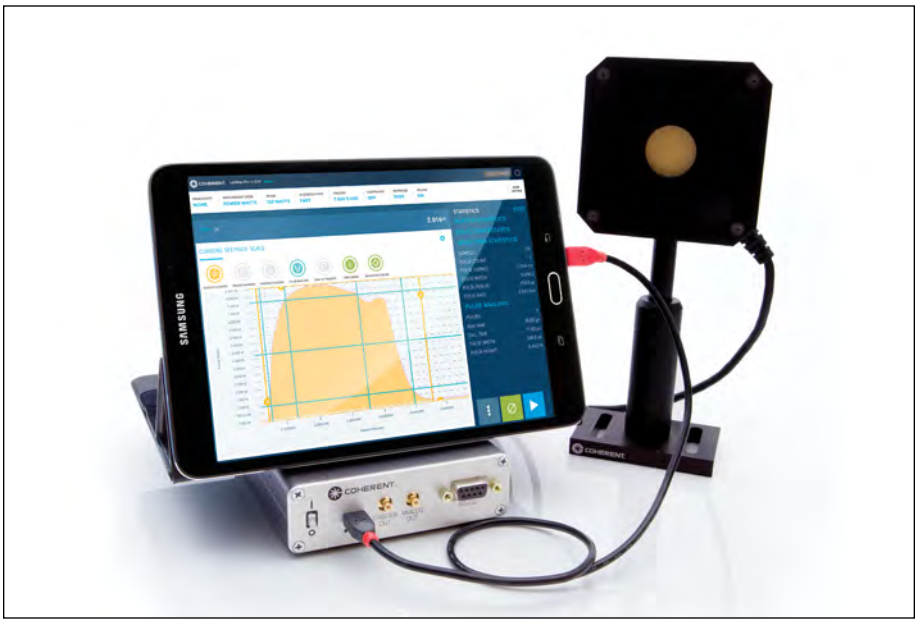

High Resolution Snapshot Data from PowerMax-Pro

The new LabMax-Pro Mobile app enables operation of laser power and energy sensors using a mobile device. By leveraging the existing high quality, yet economical, touchscreen displays currently available on the market, Coherent can deliver a powerful and easy-to-use laser measurement solution at a reduced cost. Additionally, tablet comput-ers offer a more compact and portable solution.

The Mobile App is compatible with several popular tablet computers running the Android and iOS operating systems, providing access to a comprehensive suite of laser power and energy measurement capabilities on a state-of-the-art, touchscreen display.

The app can be utilized with two different hardware configurations. In the first, the tablet is connected by USB cable or WiFi to Coherent's newest and flagship LabMax-Pro meter, which works with virtually all of Coherent's extensive selection of laser power and energy sensors. LabMax-Pro meters provide continuous sampling at 10 Hz or 20 kHz, or burst sampling at 625 kHz, and the app fully supports these high speed measurements to enable real-time analysis of modulated or pulsed systems. In the second configuration, the tablet is connected by USB cable or WiFi to one of Coherent's new PowerMax-Pro USB sensors. These integrate the meter functionality within the sensor head cable, allowing a truly "meterless" tablet solution with PowerMax-Pro sensors.

Features

- **Compatible with virtually every Coherent sensor through LabMax-Pro SSIM and with PowerMax-Pro USB**
- **Three connection options:**
  - **USB Directly to Tablet (Android only)**
  - **WiFi Directly to Tablet (with Wifi Module Accessory)**
  - **WiFi over Corporate Network (with Wifi Module Accessory)**
- **Three display layouts to choose from**
- **High Resolution Snapshot data from PowerMax-Pro**
- **Pinch & Swipe to Zoom and Pan Data**
- **Save, Import, and Export Data between Notebook and PC apps**
- **Histogram feature**
- **Tuning Needle**
- **Beam Position with LM-model thermopiles**

LabMax-Pro Mobile App

For Mobile Devices

The Android app is compatible with mobile tablet devices running the Android operating system 5.1.0 or greater. A screen size of 8" or greater is recommended to maximize the readability of the labels and trend chart, although the app will run on smaller devices if desired. We currently recommend the Galaxy Tab S2 for best performance.
The Apple app is compatible with the iPad mini and full size iPads.

Performance
The app contains all of the powerful features found in the LabMax-Pro PC app including PowerMax-Pro High Speed sampling at 20 KHz and 625 kHz Snapshot capture.

This is a fully featured application and includes the following capabilities:
- Three main display panes: Live Reading, Trend Chart, Statistics.
- Batch Analysis: Set batch size and view statistics including mean, min, max, standard deviation, stability, and many more
- Live trending including pinch and reverse pinch to expand or contract range of data in trend chart.
- Live histogram analysis
- Tuning indicator
- Beam position indicator (for LM-model thermopiles)
- Save and view data log files in the app, and send data log files for analysis in the desktop PC application
- Obtain Snapshot data with PowerMax-Pro sensors and analyze data using scope cursors
- The mobile app also performs full pulse analytics on captured Snapshot files such as rise time, fall time, pulse width, and pulse energy
- App supports a complete range of setup options found in desktop applications including Wavelength, Gain, Area Correction, Trigger, Smoothing, and Decimation
- 20 kHz live data streaming is also supported with PowerMax-Pro and Pyroelectric energy sensors

Histogram Feature

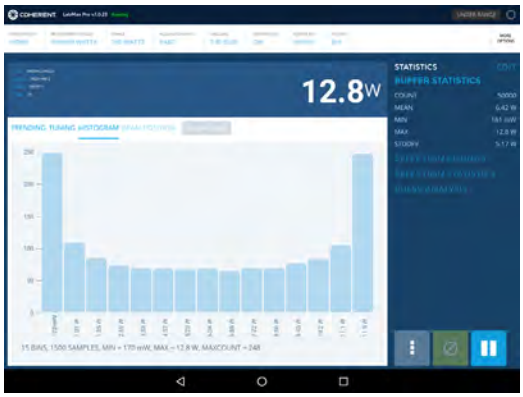

Tuning Needle

Beam Position with LM-model Thermopiles

Save, Import, and Export Data between Notebook and PC Apps

LabMax Meters

Laser Power and Energy Meters

POWER & ENERGY
Power & Energy Meters
PowerMax-Pro Sensors
USB/RS Power Sensors
DB-25 Power Sensors
USB/RS Energy Sensors
DB-25 Energy Sensors
Custom & OEM
BEAM DIAGNOSTICS
CALIBRATION & SERVICE
Laser Cross-Reference Index
Model Name Index

LabMax-TOP Power and Energy Meter

Features

- Measure power and energy
- Ergonomic design enhances user experience
- Directly compatible with PM Model and LM Model thermopiles
- Display beam position with LM Model thermopiles
- Log data to internal memory, directly onto USB flash drive, or to PC
- USB, RS-232, and GPIB PC interfaces
- Software:
  - LabMax PC applications software
  - LabVIEW instrument driver and ActiveX control
  - XP/Vista (32-bit)/Windows 7 (32-bit and 64-bit) compatible

Models

- LabMax-TOP is compatible with thermopile, optical and pyroelectric (power & energy)
- LabMax-TOP w/GPIB adds IEEE-488 GPIB PC interface (cable included)
- LabMax-TO is compatible with thermopile and optical (power and long-pulse Joules)

LabMax is a versatile meter suitable for anyone who needs to analyze laser output. It analyzes and monitors laser output via onboard data logging. It also supports logging data directly to a USB flash drive, provides enhanced data analysis and statistics, as well as a form factor that allows flexible positioning and viewing angles so it can be used in areas with limited bench space. These meters provide direct compatibility with LM Model and PM Model sensors with no need for adapters.

Sensor Compatibility

LabMax displays beam position for quick and accurate setup, and is directly compatible with most Coherent thermal, pyroelectric and semiconductor sensors. These sensors offer wavelength coverage from 190 nm to 12 µm, measure from nW to kW, from nJ to J, and from single shot to 10 kHz.

Beam Positioning

The position of the laser beam on the sensor can be displayed by LabMax when using an LM Model thermopile sensor. This makes it easier to align the laser beam during setup, especially for infrared laser beams. There is also a trending feature to monitor the position of the beam over time, and the position data can be logged to a file.

LM-45 HTD sensor with beam position

Data Logging

Data logging of unlimited size can be performed directly to a USB flash drive, and additionally over 400,000 points can be retained onboard the meter itself in flash memory. The meter has a file management system that allows naming and renaming files, auto increments file names for repetitive logging events, folder creation and renaming, and transferring files and folders from the meter storage to a USB flash drive. Data can also be logged to a file with the LabMax PC applications software.

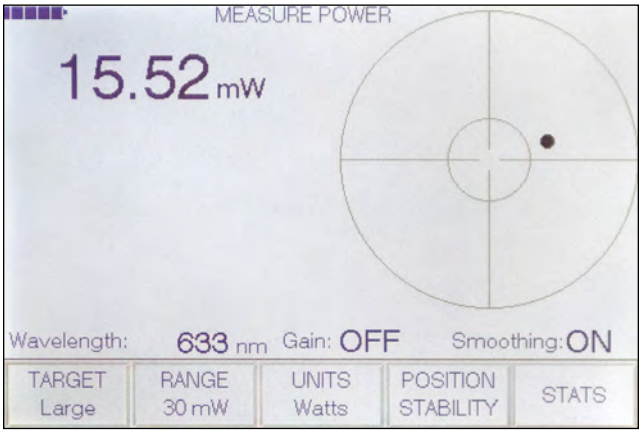

LabMax beam position display

LabMax Meters

Laser Power and Energy Meters

Ergonomic Design

LabMax features a large, backlit graphical display with an ergonomic interface with easily accessible buttons for all features and modes. The Measure, Tune, and Trend modes are directly accessible via front panel buttons.

Front panel buttons

Flexible Positioning

The LabMax display and meter can be positioned at many different angles within the limited bench space typically available in a laser lab, while still making the display easy to view.

Additional Inputs/Outputs

In addition to PC interfacing, LabMax also includes an analog output with user-selectable voltages of 0 to 1V, 2V, or 4V. Pyroelectric triggering can be achieved with an external trigger input or an internal trigger that is user-adjustable from 2% to 20% percent of full-scale range.

Measurement Analysis

LabMax meters contain several advanced analysis capabilities, including:

Onboard statistics – mean, minimum, maximum, standard deviation, range, three stability parameters, as well as missed pulses. Users can also select which statistical parameters to display, up to six at a time.

Trend charting – trend chart with statistical display and the ability to log data to a file.

Digital tuning indicators – horizontal bar and trend chart formats with peak indicators.

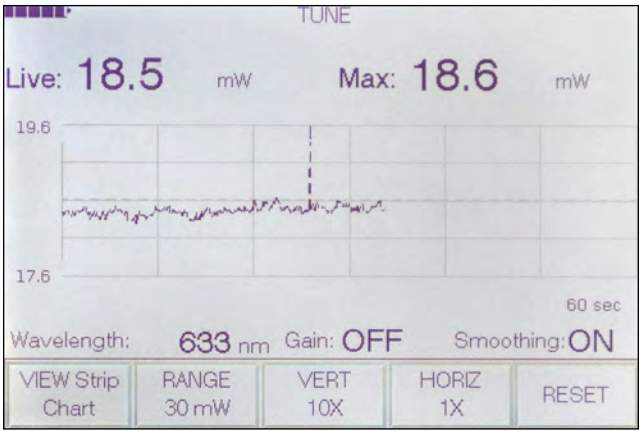

LabMax Tune Chart

PC Interfacing and Applications Software

Data can also be analyzed directly on a PC through USB, RS-232, or GPIB connections, or by logging data to a USB flash drive attached directly to the meter. Installable applications software and LabVIEW drivers are provided to support PC interfacing.

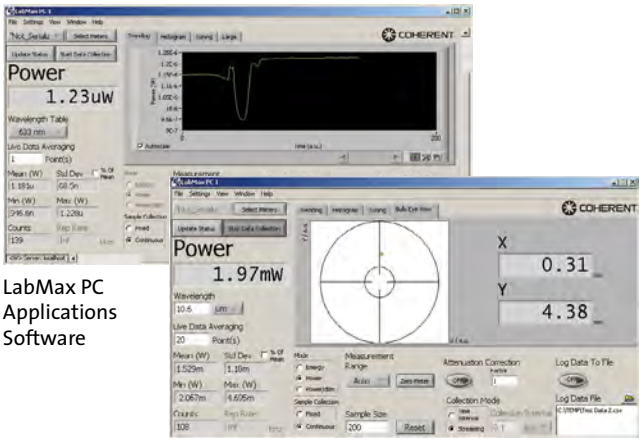

LabMax PC Applications Software

POWER & ENERGY
Power & Energy Meters
PowerMax-Pro Sensors
USB/RS Power Sensors
DB-25 Power Sensors
USB/RS Energy Sensors
DB-25 Energy Sensors
Custom & OEM
BEAM DIAGNOSTICS
CALIBRATION & SERVICE
Laser Cross-Reference Index
Model Name Index

LabMax Meters

Laser Power and Energy Meters

POWER & ENERGY
Power & Energy Meters
PowerMax-Pro Sensors
USB/RS Power Sensors
DB-25 Power Sensors
USB/RS Energy Sensors
DB-25 Energy Sensors
Custom & OEM
BEAM DIAGNOSTICS
CALIBRATION & SERVICE
Laser Cross-Reference Index
Model Name Index

Device Specifications

ISO/IEC 17025:2005

AC-1630

Model	LabMax-TOP w/GPIB	LabMax-TOP	LabMax-TO
Measurement Resolution	0.1 % of full-scale		
Displayable Resolution	3 or 4 digits pyroelectric; 3, 4, or 5 digits thermopile and optical (user-selectable)		3, 4, or 5 digits (user-selectable)
Measurement Range	Sensor dependent (reference sensor specifications)		
Accuracy			
Digital Meter	±1.0% ±2LSD		
System	Meter accuracy + sensor accuracy		
Analog Output (%)	±1.0		
Calibration Uncertainty (%)(k=2)	±1.0		
Power Sampling Rate (Hz)	10		
Maximum Repetition Rate (Hz)	10,000 sampling (1000 Hz every pulse)		
Minimum Positional Resolution (mm)	0.1		
Display	112 x 78 mm backlight graphic LCD, 480 x 320 pixels. Adjustable contrast and viewing angle		
Measurement Analysis	Min., max., mean, range, std. dev., dose, stability; trending, tuning, beam position		
Computer Interface	GPIB, USB and RS-232	USB and RS-232	
Pulse Triggering	Internal and external (selectable)		–
Analog Output (VDC)	0 to 1, 2, or 4 VDC (selectable)		
Analog Output Update Rate	Up to 1000 Hz for pyroelectric; 10 Hz for thermopile and optical		10 Hz
Temperature			
Operating Range	5 to 40°C (41 to 104°F)		
Storage Range	-20 to 70°C (-68 to 158°F)		
Instrument Power	90 to 260 VAC, 50/60 Hz		
Instrument Batteries	4400 mAH Rechargeable Li-ion Pack		
Compliance	CE, RoHS, WEEE, ISO 17025		
Dimensions (H x W x D)	152 x 229 x 53 mm (6.0 x 9.0 x 2.1 in.)		
Weight	1.25 kg (2.8 lbs.)		
Front Panel			
PWR	Turn meter on and off		
ZERO	Reset ambient offset for thermal and optical sensors		
MEASURE	Main measure mode including statistics		
TUNE	View tuning features		
TREND	Display measured values over a period of time and log data to file		
SETUP	Setup meter parameters		
HELP	Onboard context sensitive help - available from any screen		
BACKLIGHT	Toggle backlight on and off		
KNOB	Turn knob to change settings; press the knob to save settings		
Left Side Panel	USB flash drive port USB PC interface port RS-232 PC interface port DB-25 sensor port Power jack		
Rear Panel	Analog output		
	External trigger input (BNC adapter incl.)		–
	GPIB PC interface port	–	
Part Number*	1104620	1104622**	1104619**

* Meter supplied with 4400 mAH Li-ion battery, AC power adapter, power cord, 1.8-meter USB cable, RS-232 adapter, USB flash drive, RCA-to-BNC adapters, software and driver CD, soft carrying case, and certificate of calibration. LabMax-TOP w/GPIB also includes a GPIB cable.

** C24 Quick Ship program: eligible for next business day shipment.

FieldMaxII Meters

Laser Power and Energy Meters

FieldMaxII-TOP Power and Energy Meter

FieldMaxII-TO Power Meter

Features

- Measure energy of pulsed lasers up to 300 pps
- Large, backlight LCD display
- Compatible with thermopile, optical, and pyroelectric sensors
- Simulated analog-like movement for laser tuning
- USB interface with FieldMaxII PC applications software, LabVIEW instrument driver and ActiveX control
- XP/Vista (32-bit)/Windows 7 (32-bit and 64-bit) compatible
- Area function for density measurements (J/cm² or W/cm²)

Models

- FieldMaxII-TOP is compatible with thermopile, optical and pyroelectric sensors (power & energy)
- FieldMaxII-TO is compatible with thermopile and optical (power only)
- FieldMaxII-P is compatible with pyroelectric (energy only)

FieldMaxII is an affordable, versatile, easy-to-use digital power and energy meter platform designed for a variety of applications ranging from field service to production test applications.

FieldMaxII features a large, easy-to-read backlit LCD and an intuitive user interface offering button-driven control for simple operation. The meter supports onboard analysis of mean, min., max., and standard deviation statistics. It can measure power from nW to kW, and pulse energy from nJ to J at up to 300 pps. In addition, long-pulse Joules energy measurements can be made on the FieldMaxII-TOP model when using thermopiles.

The meter includes a USB PC interface as well as an analog output. The FieldMaxII PC applications software supports trend charting, tuning, statistics, and logging data to a file. A LabVIEW instrument driver with ActiveX control is provided to support custom software developments.

FieldMaxII PC Application

Features

- USB PC Interface
- FieldMaxII PC is completely open-source so that you can use it to help develop your own customized applications
- Multiple meters can be run on a single PC – useful for final test and burn-in applications
- Meters can be operated remotely via host interface and included drivers
- Software features:
  - Measure, Tune, Trend displays
  - Statistics
- LabVIEW instrument driver and ActiveX DLL server included

FieldMaxII Meters

Laser Power and Energy Meters

POWER & ENERGY
Power & Energy Meters
PowerMax-Pro Sensors
USB/RS Power Sensors
DB-25 Power Sensors
USB/RS Energy Sensors
DB-25 Energy Sensors
Custom & OEM
BEAM DIAGNOSTICS
CALIBRATION & SERVICE
Laser Cross-Reference Index
Model Name Index

Device Specifications

ISO/IEC 17025:2005

AC-1630

Model	FieldMaxII-TOP	FieldMaxII-TO	FieldMaxII-P
Function	Power and energy	Power	Energy
Measurement Resolution	0.1% of full-scale		
Measurement Range	Sensor dependent - reference sensor specifications		
Accuracy			
System	Meter accuracy + sensor accuracy		
Analog Output (%)	±1.0		
Calibration Uncertainty (%)(k=2)	±1.0		
Power Sampling Rate (Hz)	10	10	–
Maximum Pulse Rep. Rate (Hz)	300	–	300
Display	58 x 73 mm , fixed-segment LCD with backlight		
Digital Tuning Indicator	100 msec time constant		
Statistics	Mean, max., min., standard deviation		
PC Interface	USB 1.1		
Analog Output	0 to 1, 2, or 5 VDC (selectable)		
Internal Trigger	2 to 20% of full-scale, selectable	–	2% to 20% of full-scale, selectable
Temperature			
Operating Range	5 to 40°C (41 to 104°F)		
Storage Range	-20 to 70°C (-68 to 158°F)		
Instrument Power	100 to 240 VAC, 50/60 Hz		
Instrument Batteries	Rechargeable NiMH battery pack		
Compliance	CE, RoHS, WEEE, ISO 17025		
Dimensions (H x W x D)	200 x 100 x 40 mm, (7.87 x 3.94 x 1.57 in.)		
Weight	1.0 kg (2.2 lbs.)		
Front Panel			
PWR	Toggle power switch and backlight		
HZ	Display rep. rate	–	Display rep. rate
J/W	Select Joules or Watts mode	–	–
ZERO	Reset ambient offset for thermal and optical sensors		Zero stats
AUTO	Engage auto-ranging with power sensors		–
STAT	Display statistics: mean, max., min., standard deviation		
AVG	Engage display averaging		
λ	Enter wavelength and engage wavelength compensation		
ATTEN	Enter attenuation factor and engage attenuation		
AREA	J/cm² (fluence) W/cm² (power density)	W/cm² (power density)	J/cm² (fluence)
HOLD	–	Holds displayed values on screen	–
TRIG	Select trigger level with energy sensors	–	Select trigger level with energy sensors
SETUP / LOCAL	Set and enter button/Takes local control of meter back from PC		
ARROW KEYS	Manually control range; Select Stats parameter; Select and change numerical values		
Left Side Panels	Power jack USB PC interface port Analog output		
Right Side Panels	DB-25 sensor port		
Part Number*	1098580**	1098579**	1098581

* Meter supplied with NiMH rechargeable battery pack, power cord, AC adapter, USB cable (1.8m), RCA-to-BNC analog output adapter, installation CD with FieldMaxII PC and drivers, soft carrying case, and certificate of calibration.

** C24 Quick Ship program: eligible for next business day shipment.

FieldMate

Laser Power Meter

FieldMate Power Meter

Features

- **Analog needle for tuning**
- **Large digital LCD display**
- **Compatible with thermopile and optical sensors**
- **Wavelength compensation**
- **Analog output**
- **Compact and portable**
- **AC and battery power**
- **Auto ranging**

FieldMate combines a digital display and analog meter with sophisticated digital processing to enable rapid, sensitive laser adjustment. This meter also offers an economical way of measuring laser power when advanced data analysis is not necessary.

Device Specifications

ISO/IEC 17025:2005

Model	FieldMate
Power Resolution	0.1% of full-scale for all ranges in the 10s scale 0.3% of full-scale for all ranges in the 3s scale
Measurement Range	Sensor dependent (reference sensor specifications)
Accuracy	
System	Meter accuracy + sensor accuracy
Analog Meter (%)	±3.0
Analog Output (%)	±1.0
Calibration Uncertainty (%)(k=2)	±1.0
Power Sampling Rate	20 Hz (thermopile and optical)
Display	26 x 89 mm, custom fixed-segment LCD
Analog Needle	
Scale	0 to 10 (100 divisions), 0 to 3 (60 divisions)
Response	80 ms time constant
Analog Output	
Voltage	0 to 2 VDC
Update Rate	20 times/sec.
Temperature	
Operating Range	5 to 40°C (41 to 104°F)
Storage Range	-20 to 70°C (-68 to 158°F)
Instrument Power	100 to 240 VAC, 50/60 Hz
Instrument Batteries	Two 9V alkaline batteries
Compliance	CE, RoHS, WEEE, ISO 17025
Dimensions (H x W x D)	193 x 117 x 46 mm, (7.6 x 4.6 x 1.8 in.)
Weight	0.8 kg (1.8 lbs.)
Front Panel	
PWR	Toggle power
ZERO	Ambient offset
AUTO	Engage auto-ranging
λ	Enter wavelength compensation
ARROW KEYS	Manually control range; select and change numerical values
Left Side Panel	Power jack Analog output DB-25 sensor port
Part Number*	1098297**

* Meter supplied with two alkaline 9V batteries, power cord, AC power adapter, RCA-to-BNC analog output adapter, and certificate of calibration.
** C24 Quick Ship program: eligible for next business day shipment.

LaserCheck

Laser Power Meter

POWER & ENERGY
Power & Energy Meters
PowerMax-Pro Sensors
USB/RS Power Sensors
DB-25 Power Sensors
USB/RS Energy Sensors
DB-25 Energy Sensors
Custom & OEM
BEAM DIAGNOSTICS
CALIBRATION & SERVICE
Laser Cross-Reference Index
Model Name Index

Features

- Handheld laser power meter
- Wavelength range: 400 nm to 1064 nm
- User-selectable spectral compensation
- Auto-ranging with peak sample and hold
- For CW and >1 MHz lasers

Device Specifications

**C24

Model	LaserCheck
Active Area Diameter (mm)	8
Spectral Range (nm)	400 to 1064
Accuracy (%)	±5
Measurement Range[1]	
without Attenuator	10 µW to 10 mW
with Attenuator	1 mW to 1W
Display Power Ranges	9.99 µW to 999 mW
Calibration Uncertainty (%)(k=2)	±8
Minimum Power Resolution (µW)	0.01
Maximum Peak Power Density	
without Attenuator	0.5 W/cm²
with Attenuator	30 W/cm²
Display	3-digit LCD display with power unit indicator
Compliance	CE, WEEE, RoHS
Dimensions (H x W x D)	168 x 24 x 20 mm (6.6 x 0.9 x 0.7 in.)
Weight	44 g (0.09 lbs.)
Part Number (RoHS)	1098293**

[1] Power range is wavelength dependent. See charts below. Ensure peak power density does not exceed limits to avoid localized diode saturation.
**C24 Quick Ship program: eligible for next business day shipment.

LaserCheck

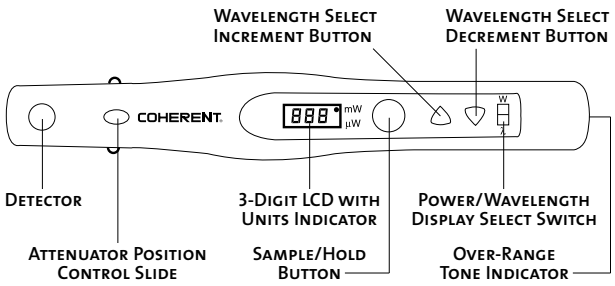

Measurable Power vs. Wavelength
LaserCheck without Attenuator

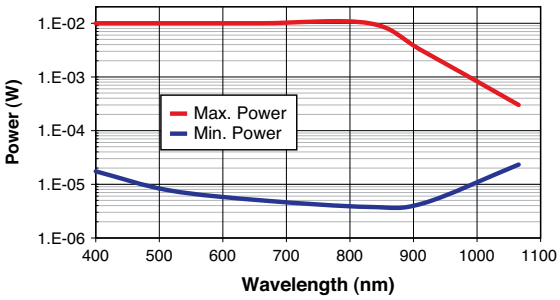

Measurable Power vs. Wavelength
LaserCheck with Attenuator

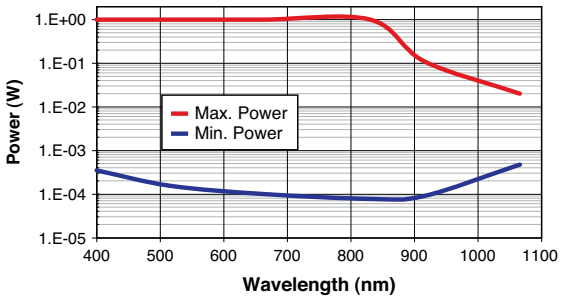

LMC System Kits and Meter Accessories

LMC System Kits

FieldMate and PM10

Coherent has packaged several of its most popular products into system kits, which allows Coherent to pass along additional savings.

Part Number	Name	Description
1095153**	S-1439	FieldMate and PM30
1133374**	S-1516	FieldMate and OP-2 VIS
1159768**	S-1544	FieldMate and PM10
1159769**	S-1545	FieldMaxII-TO and OP-2 VIS
1159770**	S-1546	FieldMaxII-TO and PM10
1159771**	S-1547	FieldMaxII-TO and PM30
1164232**	S-1550	FieldMate and PS19 System Kit
1164233**	S-1551	FieldMaxII-TO and PS19
1366204	S-1597	FieldMaxII-TOP and J-50MB-YAG
1366214	S-1598	FieldMaxII-TOP and PM150-50
1366218	S-1599	LabMax-TOP and J-50MT-10kHz

** C24 Quick Ship program: eligible for next business day shipment.

Power Supplies

Part Number	Description
1105427	12V External Power Supply for FieldMate, FieldMaxII, LabMax, LabMax-Pro

Rechargeable Batteries

Part Number	Description
1092395	7.2V 750 mAh NiMH Rechargeable Battery Pack for FieldMaxII
1110945	7.4V 5100 mAh Li-ion Rechargeable Battery Pack for LabMax

Soft Carrying Case

Part Number	Description
1212401	Soft Carrying Case for FieldMate
1122466	Soft Carrying Case for FieldMaxII, LabMax

POWER & ENERGY
Power & Energy Meters
PowerMax-Pro Sensors
USB/RS Power Sensors
DB-25 Power Sensors
USB/RS Energy Sensors
DB-25 Energy Sensors
Custom & OEM
BEAM DIAGNOSTICS
CALIBRATION & SERVICE
Laser Cross-Reference Index
Model Name Index

Power Sensors Introduction

Introduction and Selection Charts

POWER & ENERGY
Power & Energy Meters
PowerMax-Pro Sensors
USB/RS Power Sensors
DB-25 Power Sensors
USB/RS Energy Sensors
DB-25 Energy Sensors
Custom & OEM
BEAM DIAGNOSTICS
CALIBRATION & SERVICE
Laser Cross-Reference Index
Model Name Index

Coherent uses three primary coatings to capture the incident radiation on our thermal sensors. The specifications for each sensor list which coating is used. Typical wavelength ranges and response curves for these coatings are shown in the chart below. Each sensor contains a spectral curve generated from reflectance measurements taken with spectrometers. The reflectance data are converted into a wavelength compensation look-up table that is loaded into the sensor. This data is accessed by selecting a wavelength of operation in the meters.

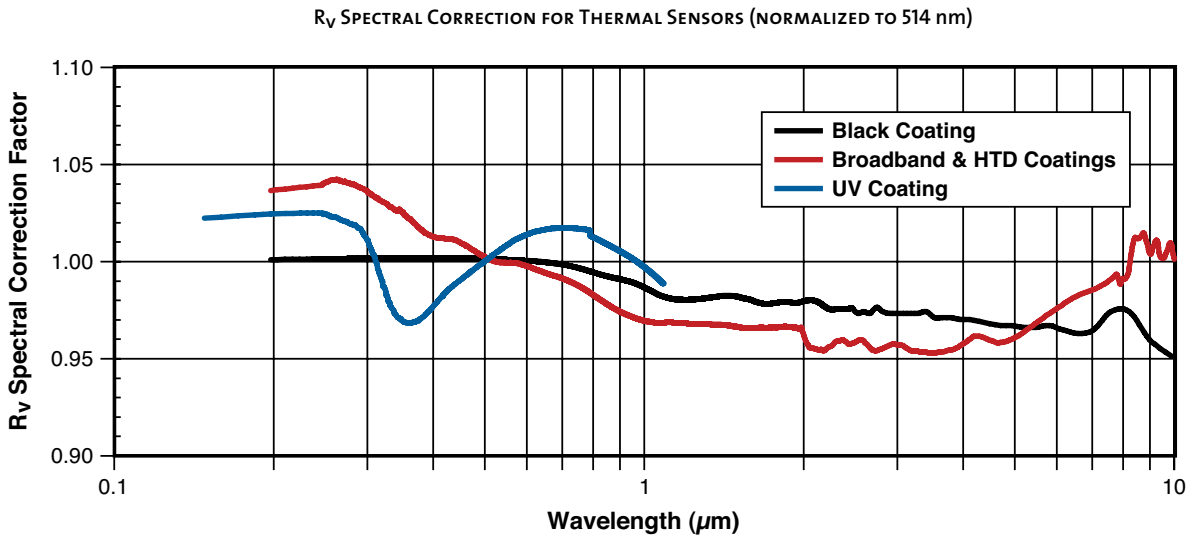

Many of our thermal sensors can measure power at levels greater than the maximum power rating for limited amounts of time. The following chart outlines how much power can be measured over a range of exposure times (Note: Water-cooled sensors are power-rated in air-cooled mode in this chart).

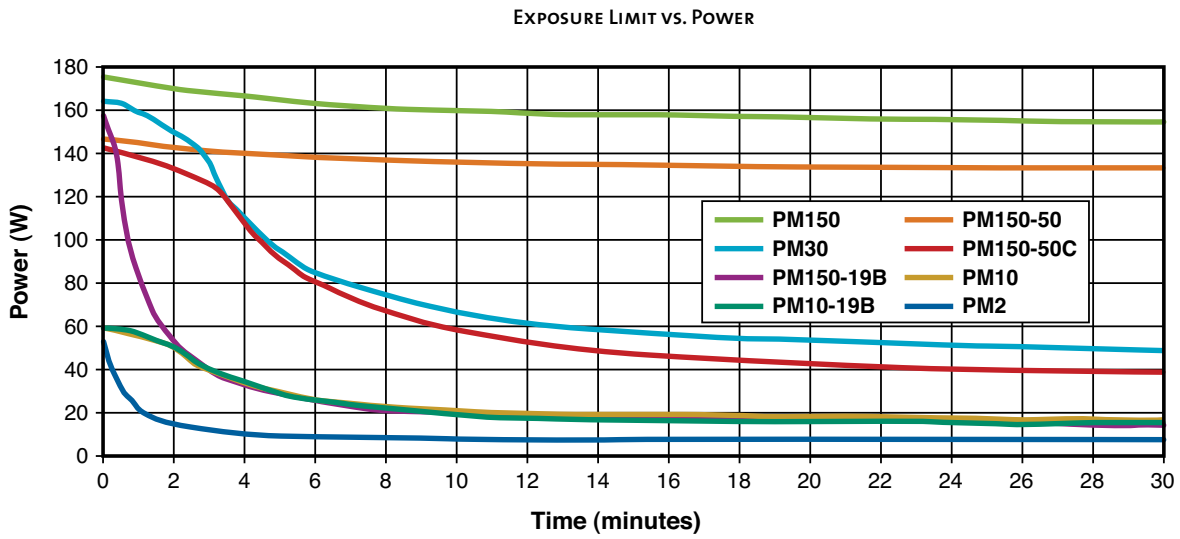

Power Sensors Introduction

Long-Pulse Energy Measurement with a Thermopile

PM10-19C, PM150-50C and PM150-50XC

Application Example 1

Laser Pulse Width	50 ms
Maximum Energy	10J
Solution	Choose a PM10

Application Example 2

Laser Pulse Width	300 ms
Maximum Energy	80J
Solution	Choose a PM150 or PM150-50C*

* Specific sensor choice depends upon aperture and mechanical constraints.

Thermopile sensors are most commonly used for average power measurements on pulsed and CW lasers. Thermopiles are also capable of integrating long pulse widths. This allows the thermopile to measure the energy of single pulses between 1 millisecond and 10 seconds in length, and with energies from millijoules to hundreds of Joules. Long-pulse measurement is only possible when the thermopiles are used in conjunction with LabMax-TOP, LabMax-TO, or FieldMaxII-TOP meters, or when using a PowerMax-USB/RS sensor.

This ability to integrate relatively long laser pulses with a thermopile is necessary when the laser pulse width exceeds the maximum pulse width rating of pyroelectric sensors. Pyroelectric sensors are typically limited to maximum pulse widths in the millisecond range. When the pulse width exceeds milliseconds, a thermopile is a good solution.

A good "rule of thumb" for using a thermopile for this type of measurement is to compare the maximum pulse energy you need to measure with the maximum power rating of a sensor (maximum power ratings can be found in the Power Sensor Summary Specifications on pages 57 to 58 or in the detailed product specifications contained on each product page).

Common applications for this type of measurement are in the medical field, especially skin resurfacing and hair removal, and in material processing applications such as laser welding. These laser systems often utilize high-energy diode lasers that have large beam sizes and relatively long pulses. A detector like the PM150-50C is ideal for these measurements. It features a large 50 mm aperture size, can handle pulse energies up to 150J, and can be used air-cooled for single pulse energy measurements (a PM150-50C will normally need to be water-cooled for continuous power measurements).

Using a LabMax power/energy meter, or a PowerMax-USB/RS sensor, expands the range of long-pulse Joule measurements down into the low millijoule level when used with thermopiles such as the PS10, PS10Q, PS19, and PS19Q sensors.

Long-pulse measurements are limited to single pulses in order to achieve the most accurate measurements.

PowerMax-Pro Sensors

Laser Power Sensors

POWER & ENERGY
Power & Energy Meters
PowerMax-Pro Sensors
USB/RS Power Sensors
DB-25 Power Sensors
USB/RS Energy Sensors
DB-25 Energy Sensors
Custom & OEM
BEAM DIAGNOSTICS
CALIBRATION & SERVICE
Laser Cross-Reference Index
Model Name Index

PowerMax-Pro 150F HD and PowerMax-Pro 150 HD

PowerMax-Pro USB and RS sensors incorporate LabMax-Pro instrumentation directly within the sensor cable. Similar to other Coherent USB and RS sensors, this configuration offers a smaller form factor for use inside laser processing systems or production lines. Additionally, the cost of annual calibration is half that of a separate meter and sensor system. The PowerMax-Pro USB and RS sensors operate with LabMax-Pro PC applications software (included).

PowerMax-Pro (Patent #9,012,848) represents a dramatic technological advancement in laser power sensing that utilizes a thin-film detector only microns thick which rapidly senses thermal changes due to incident laser energy. The result is a measurement response time below 10 µs, as compared to over 1 second for traditional thermopiles. These detectors can operate at high power over a spectral range as broad as 355 nm to 11 µm, and incorporate a large 30 mm x 30 mm active area.

The high response speed of PowerMax-Pro sensors is particularly advantageous in a wide range of commercial and medical applications. It enables nearly instant measurement of CW laser power, resulting in increased throughput, and also supports high resolution analysis of modulated laser pulse shapes resulting in improved laser characterization and process control.

Features

- **Enhance productivity and quality while improving measurement speed**
- **Measures power in tens of microseconds**
- **High power up to 150W**
- **Supports lasers from UV to Far-IR wavelengths**
- **Capable of tracing the individual pulse shape of modulated and long pulse lasers**
- **Large 30 x 30 mm active area**

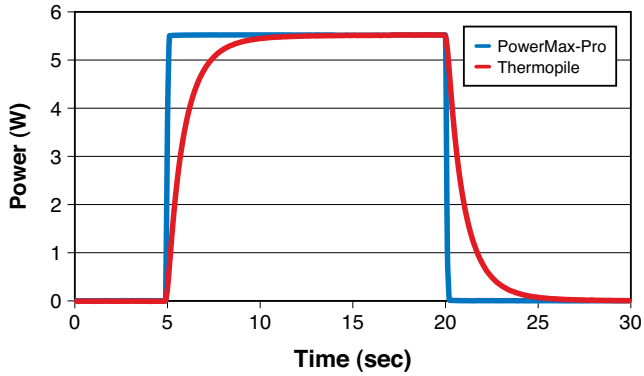

Figure 1: The rise time of a typical mid-power thermopile (30W) compared with the PowerMax-Pro

PowerMax-Pro Sensors

Laser Power Sensors

A dramatic technological advancement from Coherent has yielded a completely new type of fast response power detector. The high response speed is particularly advantageous in commercial applications where it enables CW laser power to be sampled faster and more frequently; with modulated sources it delivers peak power and temporal pulse shape data, from which pulse energy can be integrated. This real-time feedback can be used to improve laser system throughput and quality, and to improve process precision, with minimal engineering investment.

In contrast to the traditional, radial flow thermopile, which has a sensing time constant value of several seconds, the time constant for PowerMax-Pro is in the microsecond range. This enables the sensor to provide an essentially instant power measurement (Figure 1). The PowerMax-Pro sensor preserves the main benefits of the traditional thermopile architecture, namely large active area (30 mm x 30 mm), wide dynamic range (50 mW to 150W), high damage resistance (14 kW/cm^2) and broad wavelength range (300 nm to 11 µm).

The response speed of PowerMax-Pro sensors allows users to move beyond just measuring average power, and enables analysis of the temporal pulse shape and peak power of modulated lasers with pulse lengths greater than 10 µs. These pulses can then be integrated to calculate individual pulse energy.

The following figures demonstrates PowerMax-Pro high speed analysis feature being used to track the power output of an RF-modulated CO2 laser from the time the laser is first turned on until the laser stabilizes:

Application: Engraving, Light Cutting
Laser: 25 kHz RF-modulated CO_2 laser
Pulse Length: 20 µsec

POWER & ENERGY
Power & Energy Meters
PowerMax-Pro Sensors
USB/RS Power Sensors
DB-25 Power Sensors
USB/RS Energy Sensors
DB-25 Energy Sensors
Custom & OEM
BEAM DIAGNOSTICS
CALIBRATION & SERVICE
Laser Cross-Reference Index
Model Name Index

PowerMax-Pro Sensors

Laser Power Sensors

POWER & ENERGY
Power & Energy Meters
PowerMax-Pro Sensors
USB/RS Power Sensors
DB-25 Power Sensors
USB/RS Energy Sensors
DB-25 Energy Sensors
Custom & OEM
BEAM DIAGNOSTICS
CALIBRATION & SERVICE
Laser Cross-Reference Index
Model Name Index

Application: Engraving, Light Cutting, Marking
Wavelength: 10.6 µm
Laser: CO_2

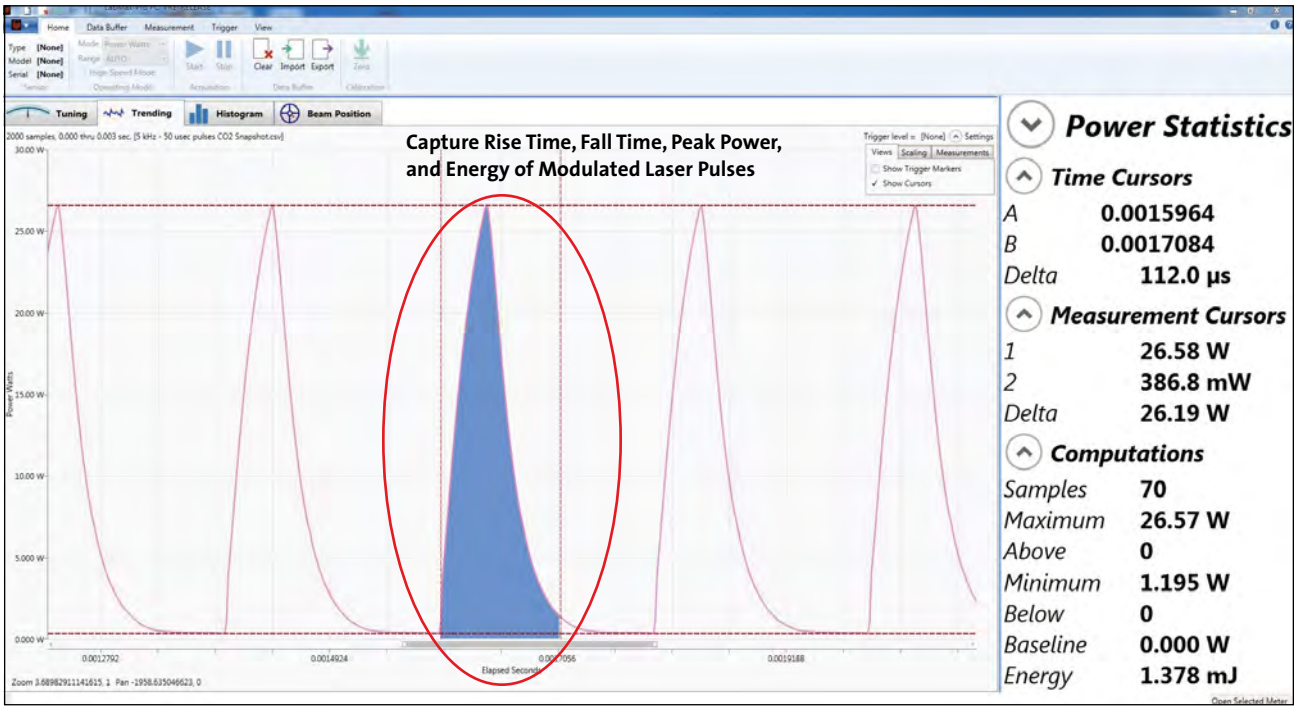

Application: Cutting, Drilling
Wavelength: 10.6 µm
Pulse Length: 1 msec
Laser: CO_2

Read more about PowerMax-Pro technology fundamentals on page 5. Further details about high speed analysis are available on the LabMax-Pro section on pages 10 to 13.

PowerMax-Pro Sensors

100 mW to 150W

Device Specifications

ISO/IEC 17025:2005

AC-1630

Model	PowerMax-Pro 150 BB	PowerMax-Pro 150 HD	PowerMax-Pro 150 BB Nano[1]	PowerMax-Pro 150 HD Nano[1]
Wavelength Range[2]	400 nm to 11 µm	400 nm to 1100 nm; 9 µm to 11 µm	400 nm to 11 µm	400 nm to 1100 nm; 9 µm to 11 µm
Power Range for Continuous Usage				
Water-cooled[3]	100 mW to 150W			
Air-cooled	100 mW to 17W			
Maximum Peak Power (W) (use for >1 µsec pulses up to CW)	170	170	200[4]	200[4]
Maximum Intermittent Power (W)(<5 min.)	65 (air-cooled)			
Noise Equivalent Power (mW)				
Standard Mode	<1			
High Speed Mode	<4			
Snapshot Mode	<9			
Maximum Power Density (kW/cm²)	0.2 (150W)			
Maximum Peak Power Density (kW/cm²)	14			
Maximum Energy Density (mJ/cm²)	33 (10 ns; 1064 nm)			
Rise & Fall Time (µs)	≤50	≤10	≤350	≤350
Detector Coating	BB	HD	BB	HD
Active Area (mm)	30 x 30			
Minimum Beam Size (mm)	2.0 (1.0 mm - up to 3% error)			
Calibration Uncertainty (%)(k=2)	±2			
Power Linearity (%)	±3			
Spectral Compensation Accuracy (%)	±3			
Spatial Uniformity (%) (center 75% of aperture; 2.5 mm beam)	±5			
Calibration Wavelength (nm)	801			
Cooling Method	Water/Air (intermittent)			
Cable Type	DB25			
Cable Length	2.5 m (8.2 ft.)			
Part Number	1323849	1266709**	1325550	1325549

[1] Choose a "Nano" model PowerMax-Pro sensor when measuring the average power of industrial short pulsed (nanosecond and picosecond) lasers. The amplifier in the "Nano" is adjusted to account for the high peak impulse powers associated with those types of lasers. Lasers of this type within the Coherent portfolio include the Matrix QS, Avia NX, Flare NX, Helios (the regular "HD" models are not appropriate for these short pulsed, high energy lasers).

[2] Contact Coherent for 355nm usage guidelines.

[3] Water flow rate for water-cooled sensors must be >0.5 GPM (>2 LPM).

[4] For pulses shorter than 1 µsec, use the maximum pulse energy density and average power specifications instead of peak power.

** C24 Quick Ship program: eligible for next business day shipment.

PowerMax-Pro 150 HD and BB

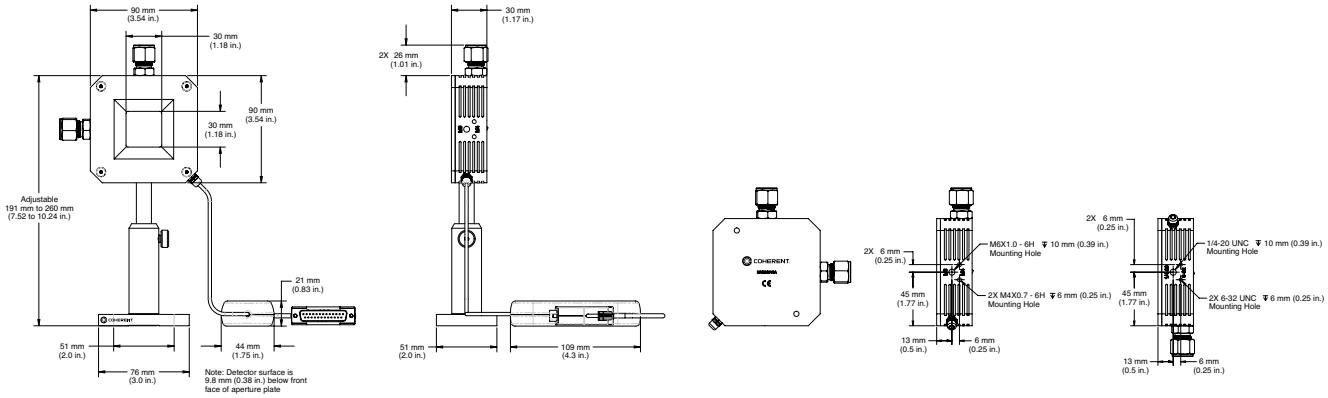

PowerMax-Pro Sensors

100 mW to 150W

POWER & ENERGY
Power & Energy Meters
PowerMax-Pro Sensors
USB/RS Power Sensors
DB-25 Power Sensors
USB/RS Energy Sensors
DB-25 Energy Sensors
Custom & OEM
BEAM DIAGNOSTICS
CALIBRATION & SERVICE
Laser Cross-Reference Index
Model Name Index

Device Specifications

ISO/IEC 17025:2005

AC-1630

Model	PowerMax-Pro 150F BB	PowerMax-Pro 150F HD	PowerMax-Pro 150F Nano[1]
Wavelength Range[2]	400 nm to 11 µm	400 nm to 1100 nm; 9 µm to 11 µm	400 nm to 11 nm; 9 µm to 11 µm
Power Range for Continuous Usage			
Water-cooled[3]		-	
Fan-cooled		100 mW to 150W	
Maximum Peak Power (W) (use for >1 µsec pulses up to CW)	170	170	200[4]
Maximum Intermittent Power (W)(<5 min.)		150 (maximum)	
Noise Equivalent Power (mW)			
Standard Mode		<1	
High Speed Mode		<4	
Snapshot Mode		<9	
Maximum Power Density (kW/cm²)		0.2 (150W)	
Maximum Peak Power Density (kW/cm²)		14	
Maximum Energy Density (mJ/cm²)		33 (10 ns; 1064 nm)	
Rise & Fall Time (µs)	≤50	≤10	≤350
Detector Coating	BB	HD	HD
Active Area (mm)		30 x 30	
Minimum Beam Size (mm)		2.0 (1.0 mm - up to 3% error)	
Calibration Uncertainty (%)(k=2)		±2	
Power Linearity (%)		±3	
Spectral Compensation Accuracy (%)		±3	
Spatial Uniformity (%) (center 75% of aperture; 2.5 mm beam)		±5	
Calibration Wavelength (nm)		801	
Cooling Method		Fan	
Cable Type		DB25	
Cable Length		2.5 m (8.2 ft.)	
Part Number	1323848	1266708**	1331019

[1] Choose a "Nano" model PowerMax-Pro sensor when measuring the average power of industrial short pulsed (nanosecond and picosecond) lasers. The amplifier in the "Nano" is adjusted to account for the high peak impulse powers associated with those types of lasers. Lasers of this type within the Coherent portfolio include the Matrix QS, Avia NX, Flare NX, Helios (the regular "HD" models are not appropriate for these short pulsed, high energy lasers).
[2] Contact Coherent for 355nm usage guidelines.
[3] Water flow rate for water-cooled sensors must be >0.5 GPM (>2 LPM).
[4] For pulses shorter than 1 µsec, use the maximum pulse energy density and average power specifications instead of peak power.
** C24 Quick Ship program: eligible for next business day shipment.

PowerMax-Pro 150F HD and BB

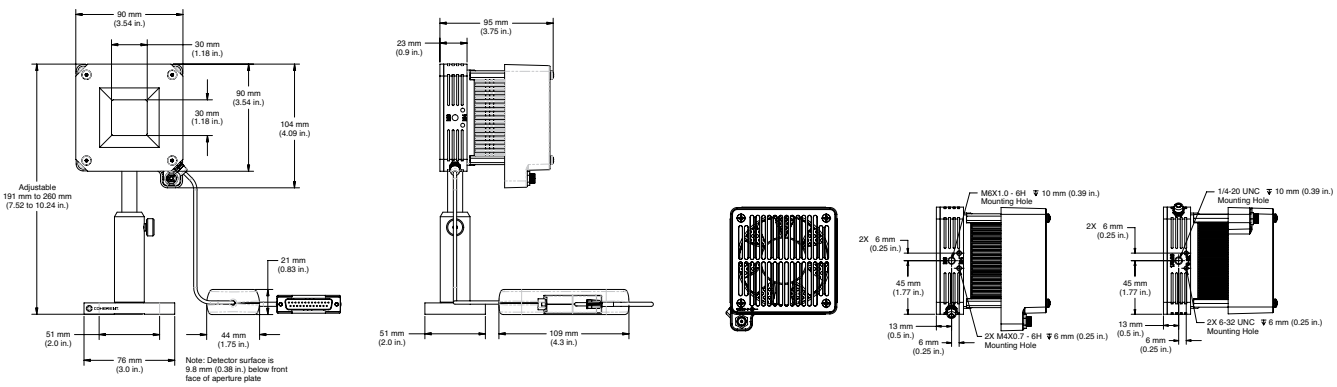

PowerMax-Pro kW Sensors

1 W to 3 kW

Device Specifications

Model	PMP 1 kW	PMP 3 kW
Average Power Range[1] (continuous)	1W to 1 kW	1W to 3 kW
Maximum Pulsed Peak Power (kW)	1	5
Noise Equivalent Power		
Standard Mode (10 Hz)	<50 mW	
High Speed Mode (20 kHz)	<0.5W	
Snapshot Mode (625 kHz)	<1.5W	
Maximum Power Density (kW/cm²)	5.0 at 1 kW avg. power	2.4 at 3 kW avg. power
Rise Time (µs)	≤20	
Fall Time (µs)	≤20	
Protective Front Window	Available for 1070 nm model (see part number below)	
Active Area (mm)		
Horizontal Axis	30 (element is 57 mm from front plate)	
Vertical Axis	27.5 (element is 57 mm from front plate)	
Minimum Beam Size (mm)	10 at 1 kW avg. power	20 at 3 kW avg. power
Calibration Uncertainty (%) (k=2)	±2.5	
Power Linearity (%)	±3	
Back Reflection (%)	<1	
when used with QBH Adapter (Class 1)	0	
Wavelength Range (nm)	Fixed calibration point ±50	
Calibration Wavelength[2]	801 nm, 1070 nm, 10.6 µm	
Cooling Method[3]	Water	
Cable Type	DB25	
Cable Length	3m (9.8 ft.)	
Part Number		
810 nm (no window)	1324794	1325222
810 nm (with Diode Laser Debris Shield Window)	1334122	1334126
1070 nm (no window)	1324796	1325224
1070 nm (with Fiber Laser Debris Shield Window)	1325221	1325226
10.6 µm (no window)	1324795	1325223
10.6 µm (with CO_2 Laser Debris Shield Window)	1334121	1334125
810 nm, 1070 nm and 10.6 µm (no window)	1324797	1325225
Optional Accessories		
C-Mount Adapter Front Plate	1325227	
QBH Adapter Front Plate	1319787	
QBH Adapter Front Plate[4] (includes QBH Adapter)	1325228	
Replacement Fiber Laser Debris Shield Window[5]	1324793	
Replacement CO2 Laser Debris Shield Window[6]	1331407	
Replacement Diode Laser Debris Shield Window[7]	1331408	
Window Mount Front Sensor Cover	1323853	

[1] See power handling curve for beam size requirements.
[2] Wavelengths typical; model dependent.
[3] 1 gpm water flow with less than 10 PSI back pressure.
[4] The QBH bayonet is included in this assembly.
[5] 1030 nm to 1120 nm; <0.5% absorption.
[6] 9 µm to 11 µm; <0.5% absorption.
[7] 780 nm to 980 nm; <0.5% absorption.

PowerMax-Pro 1 kW and 3 kW Free Space Models

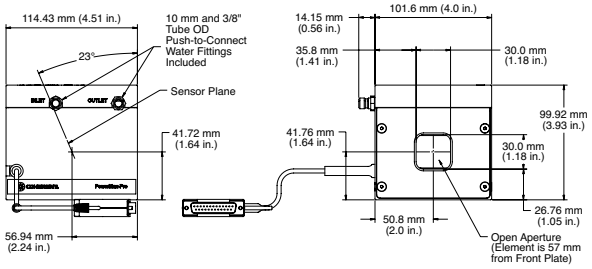

PowerMax-Pro 1 kW and 3 kW with Window Models

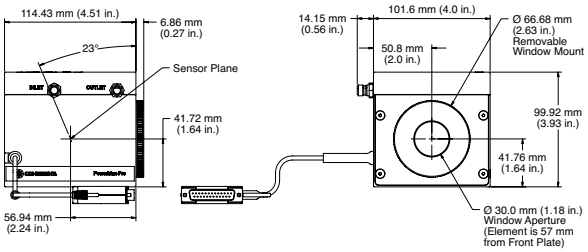

PowerMax-Pro kW Sensors

1 W to 3 kW

POWER & ENERGY
Power & Energy Meters
PowerMax-Pro Sensors
USB/RS Power Sensors
DB-25 Power Sensors
USB/RS Energy Sensors
DB-25 Energy Sensors
Custom & OEM
BEAM DIAGNOSTICS
CALIBRATION & SERVICE
Laser Cross-Reference Index
Model Name Index

PowerMax-Pro kw Sensor

This chart indicates the maximum average power the sensor can handle based upon beam diameter.

This chart can be used to determine intermittent power handling capability at powers above 3 kW.

The plot shows the length of time the sensor can be exposed to particular powers with several beam diameters.

Maximum Average Power by Beam Diameter

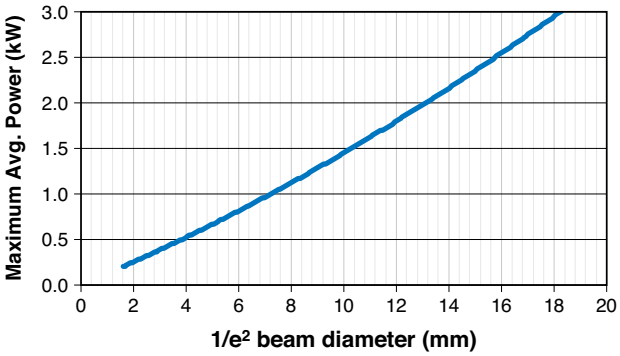

Laser Power by Beam Size and Exposure Time

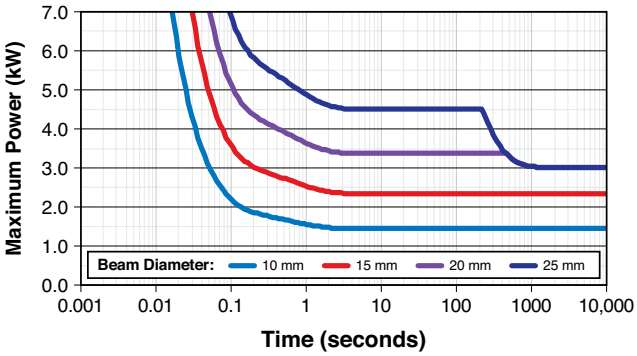

[1] We do not recommend any long term usage above 3 kW average power because the housing can become too hot and the heat sink absorber can easily damage. At 3 kW the top front portion of the enclosure will reach 83°C in approximately 1000 seconds (at 2 kW average power the enclosure will reach 61°C at 1000 seconds and at 1 kW the enclosure reaches 51°C at 1000 seconds).

[2] The sensor can be used above 3 kW intermittently for up to 200 to 400 seconds with increasingly larger beams.

[3] With a 20 mm diameter beam, this sensor can be used safely with modulated sources with peak powers up to 5 kW and pulse lengths up to 100 milliseconds.

[4] If care is taken to increase the beam size to 25 mm, the sensor could be used with modulated peak power up to 7 kW for 100 milliseconds.

[5] These curves are for Gaussian beam profiles. Flatter beams can handle higher powers (~5%) for longer lengths of time, and beams with hot spots or "super Gaussian" beams the curves must be de-rated by up to 30%. Contacting Coherent LMC applications engineering for more detailed information.

PowerMax-Pro HP Sensors

1W to 15 kW

Device Specifications

ISO/IEC 17025:2005

AC-1630

Model	PowerMax-Pro HP
Wavelength Range	700 nm to 1070 nm; 10.6 µm
Average Power Range[1]	1W to 350W (22W max air-cooled, cont.) (75W max air-cooled, 5 min.)
Maximum Pulsed Peak Power (W)	15000 (<10 msec burst) 1500 (continuous)
Noise Equivalent Power (mW)	
Standard Mode (10 Hz)	<25
High Speed Mode (20 kHz)	<100
Snapshot Mode (625 kHz)	<300 (low 5 kW range) <1.5W (high 40 kW range)
Maximum Power Density (kW/cm²)	1.2 (150W)
Maximum Peak Power Density (kW/cm²)	50 (1 ms; 1064 nm)
Maximum Energy Density (J/cm²)	30 (3 ms; 755 nm)
Rise Time (µs)	≤10
Fall Time (µs)	≤10
Detector Coating	HD
Diffuser	ZnSe
Active Area (mm)	25 dia.
Minimum Beam Size (mm)	Set by damage threshold
Maximum Beam Size[2] (mm)	18
Calibration Uncertainty (%)(k=2) at 810 nm	±2
Spectral Compensation Accuracy (%)	±5
Power Linearity[3] (%)	±2 (1W-10 kW) 3-10 (10-15 kW)
Spatial Uniformity (%) (center 64% of aperture; 2.5 mm beam)	±5
Calibration Wavelength (nm)	801
Cooling Method	Water/Air (intermittent)
Cable Type	DB25
Cable Length	2.5 m (8.2 ft.)
Part Number	1286588**

[1] Beam size dependent. See steady-state and intermittent power charts.
[2] See spatial uniformity and beam diameter charts for larger beams.
[3] Beam size and pulse length dependent. See peak power and pulse length charts.
** C24 Quick Ship program: eligible for next business day shipment.

PowerMax-Pro HP

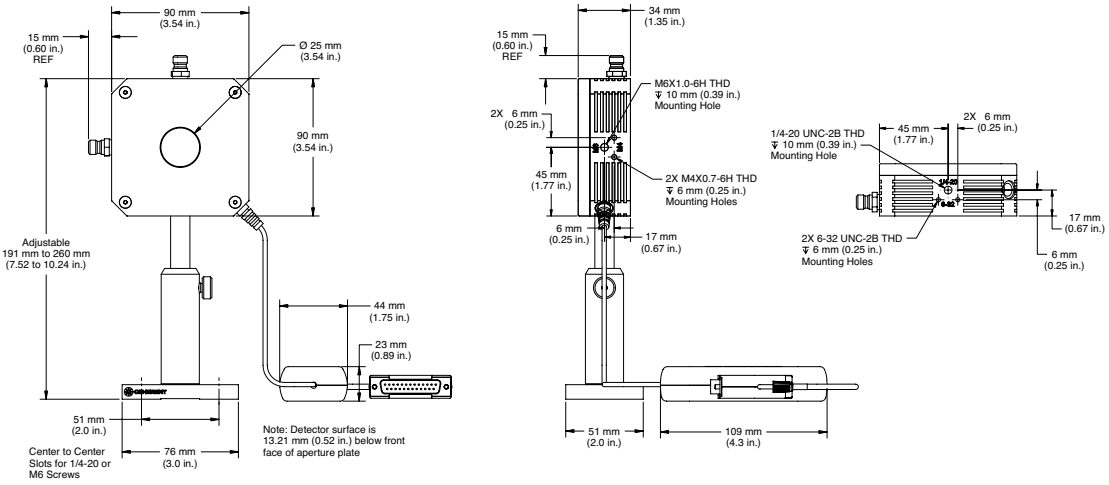

PowerMax-Pro HP Sensors

1W to 15 kW

POWER & ENERGY
Power & Energy Meters
PowerMax-Pro Sensors
USB/RS Power Sensors
DB-25 Power Sensors
USB/RS Energy Sensors
DB-25 Energy Sensors
Custom & OEM
BEAM DIAGNOSTICS
CALIBRATION & SERVICE
Laser Cross-Reference Index
Model Name Index

PowerMax-Pro HP Intermittent Average Power

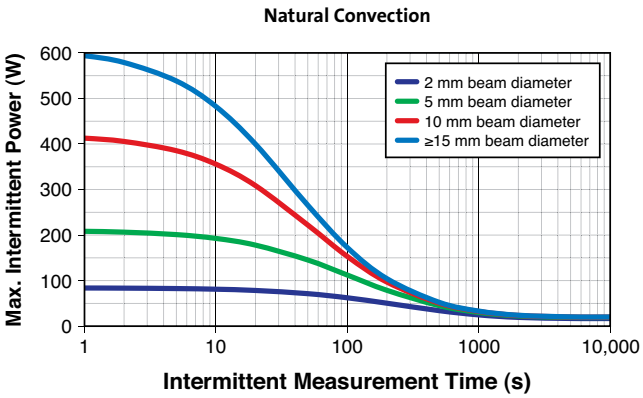

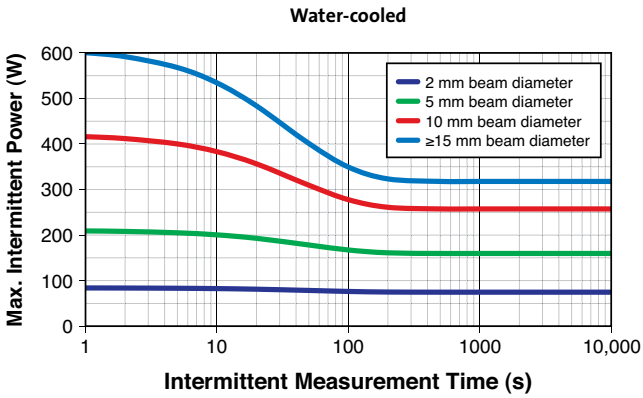

PowerMax-Pro HP Measurement Error with Peak Power and Pulse Length

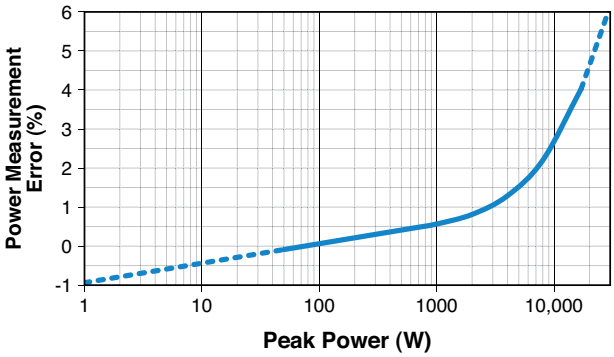

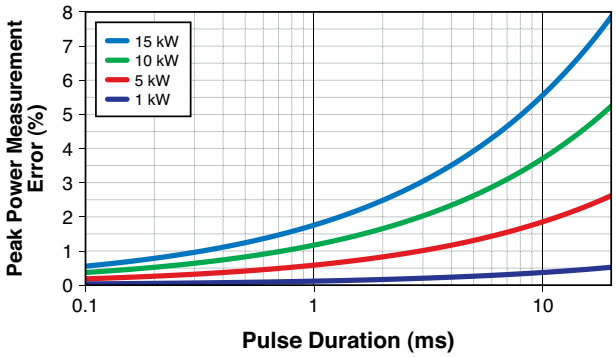

PowerMax-Pro HP Maximum Steady-State Average Power

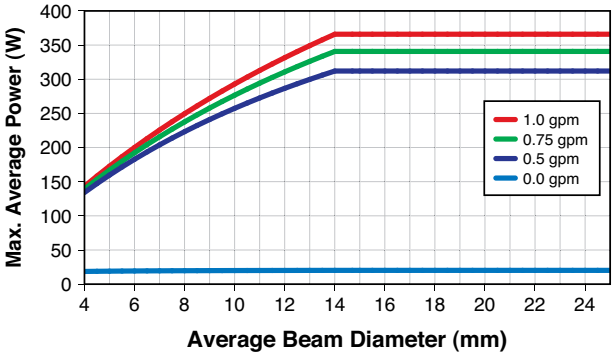

PowerMax-Pro USB/RS Sensors

100 mW to 150W

Device Specifications

ISO/IEC 17025:2005

AC-1630

Model	PowerMax-Pro USB/RS 150 HD	PowerMax-Pro USB/RS 150 HD Nano[1]	PowerMax-Pro USB/RS 150F HD	PowerMax-Pro USB/RS 150F HD Nano[1]
Wavelength Range	400 nm to 1100 nm; 9 µm to 11 µm			
Power Range for Continuous Usage				
Water-cooled[2]	200 mW to 150W	200 mW to 150W	-	-
Air-cooled	200 mW to 17W	200 mW to 17W	200 mW to 150W	200 mW to 150W
Maximum Peak Power (W)(use for >1 µsec pulses up to CW)	200[3]			
Max. Intermittent Power (W)(<5 min.)	65 (air-cooled)	65 (air-cooled)	150 (maximum)	150 (maximum)
Noise Equivalent Power (mW)				
Standard Mode	<4			
High Speed Mode	<8			
Snapshot Mode	<16			
Maximum Power Density (kW/cm²)	0.2 (150W)			
Maximum Peak Power Density (kW/cm²)	14			
Maximum Energy Density (mJ/cm²)	33 (10 ns; 1064 nm)			
Rise & Fall Time (µs)	≤10	≤350	≤10	≤350
Detector Coating	HD			
Active Area (mm)	30 x 30			
Minimum Beam Size (mm)	2.0 (1.0 mm - up to 3% error)			
Calibration Uncertainty (%)(k=2)	±2			
Power Linearity (%)	±5			
Spectral Compensation Accuracy (%)	±3			
Spatial Uniformity (%)(center 75% of aperture; 2.5 mm beam)	±5			
Calibration Wavelength (nm)	801			
Cooling Method	Water/Air (intermittent)	Water/Air (intermittent)	Fan	Fan
Cable Type	USB/RS-232			
Cable Length	2.5 m (8.2 ft.)			
Part Number				
USB	1295921	1330510	1295920	1330544
RS-232	1295923	1330545	1295922	1330546

[1] Choose a "Nano" model PowerMax-Pro sensor when measuring the average power of industrial short pulsed (nanosecond and picosecond) lasers. The amplifier in the "Nano" is adjusted to account for the high peak impulse powers associated with those types of lasers. Lasers of this type within the Coherent portfolio include the Matrix QS, Avia NX, Flare NX, Helios (the regular "HD" models are not appropriate for these short pulsed, high energy lasers).

[2] Water flow rate for water-cooled sensors must be >0.5 GPM (>2 LPM).

[3] For pulses shorter than 1 µsec, use the maximum pulse energy density and average power specifications instead of peak power.

PowerMax-Pro USB/RS 150 HD and Nano

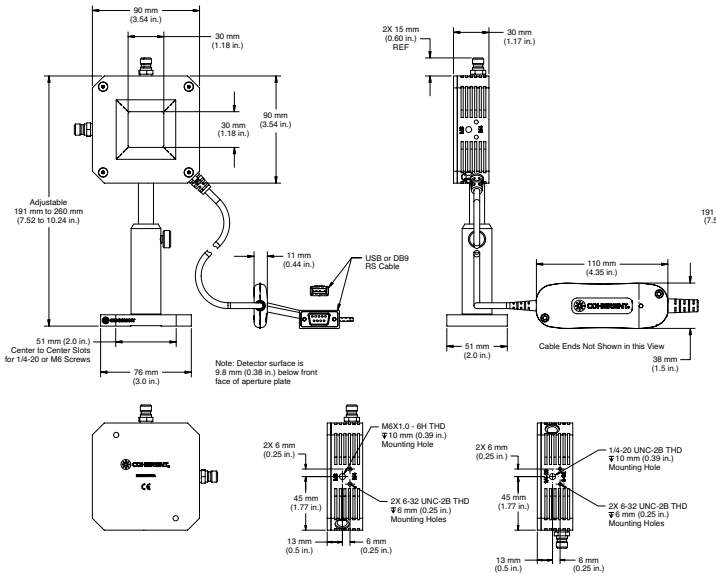

PowerMax-Pro USB/RS 150F HD and Nano

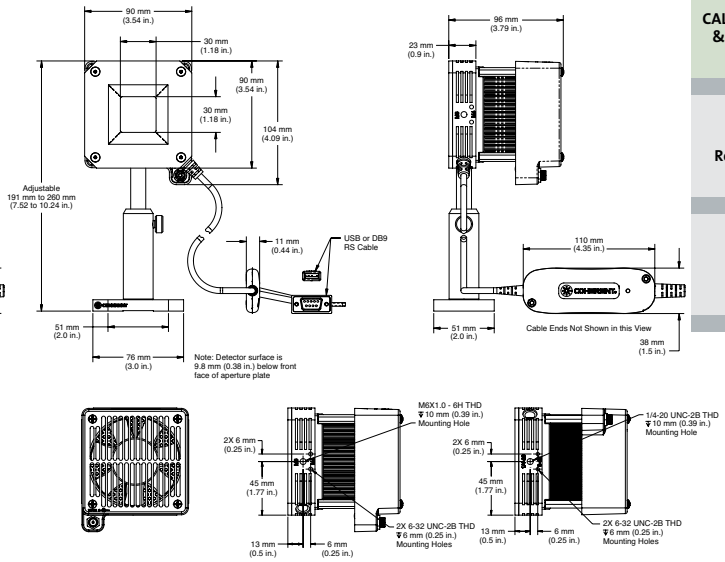

PowerMax-Pro USB/RS Sensors

200 mW to 150W

POWER & ENERGY
Power & Energy Meters
PowerMax-Pro Sensors
USB/RS Power Sensors
DB-25 Power Sensors
USB/RS Energy Sensors
DB-25 Energy Sensors
Custom & OEM
BEAM DIAGNOSTICS
CALIBRATION & SERVICE
Laser Cross-Reference Index
Model Name Index

Device Specifications

ISO/IEC 17025:2005

AC-1630

Model	PowerMax-Pro USB/RS 150 BB	PowerMax-Pro USB/RS P150F BB
Wavelength Range	400 nm to 11 µm	
Power Range for Continuous Usage		
Water-cooled[1]	200 mW to 150W	-
Air-cooled (65W max air-cooled, 5 min.)	200 mW to 50W	200 mW to 150W
Maximum Pulsed Peak Power (W) (use for >1 µsec pulses up to CW)	200[2]	
Maximum Intermittent Power (W)(<5 min.)	65 (air-cooled)	
Noise Equivalent Power (mW)		
Standard Mode	<4	
High Speed Mode	<8	
Snapshot Mode	<16	
Maximum Power Density (kW/cm^2)	0.2 (150W)	
Maximum Peak Power Density (kW/cm^2)	14	
Maximum Energy Density (J/cm^2)	33 (10 ns; 1064 nm)	
Rise & Fall Time (µs)	≤50	
Detector Coating	BB	
Active Area (mm)	30 x 30	
Minimum Beam Size (mm)	2.0 (1.0 mm - up to 3% error)	
Calibration Uncertainty (%)(k=2)	±2	
Power Linearity (%)	±5	
Spectral Compensation Accuracy (%)	±3	
Spatial Uniformity (%)(center 75% of aperture; 2.5 mm beam)	±5	
Calibration Wavelength (nm)	801	
Cooling Method	Water/Air (intermittent)	
Cable Type	USB/RS-232	
Cable Length	4.2m (13.8 ft.)	
Part Number		
USB	1342379	1342380
RS-232	1342381	1342382

[1] Water flow rate for water-cooled sensors must be >0.5 GPM (>2 LPM).
[2] For pulses shorter than 1 µsec, use the maximum pulse energy density and average power specifications instead of peak power.

PowerMax-Pro USB/RS 150 BB

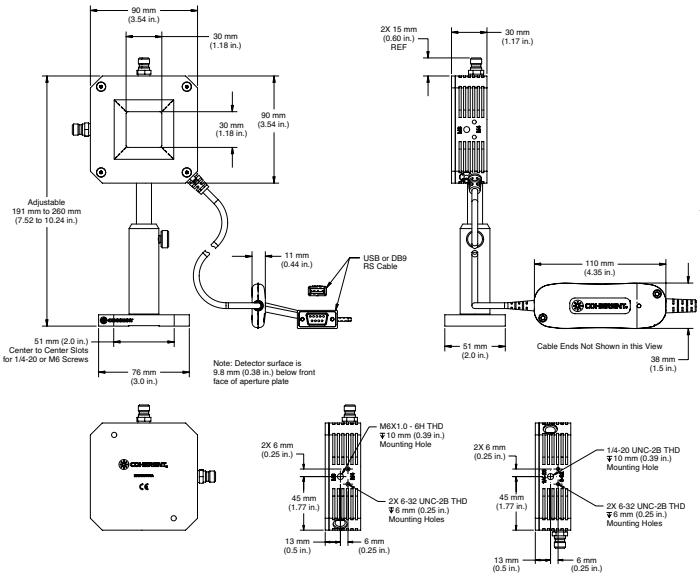

PowerMax-Pro USB/RS 150F BB

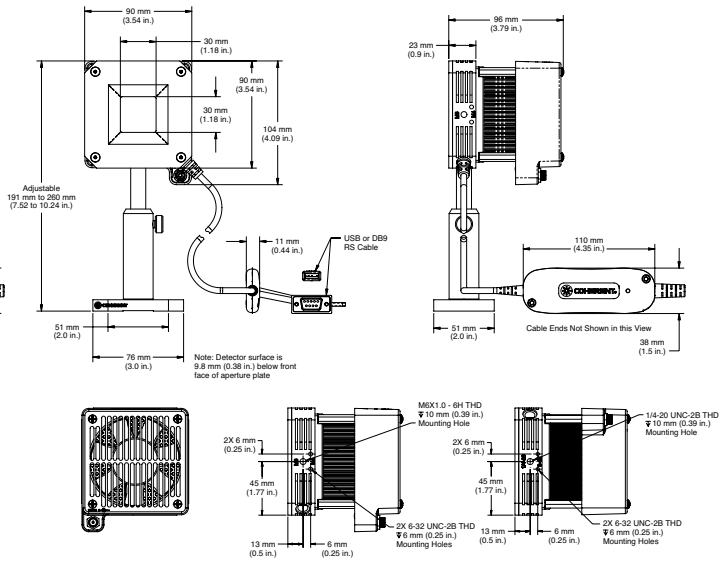

PowerMax-Pro USB/RS Sensors

3W to 2 kW

Device Specifications

ISO/IEC 17025:2005

AC-1630

Model	PowerMax-Pro USB/RS HP 2K
Wavelength Range	700 nm to 1070 nm; 10.6 µm
Average Power Range[1]	3W to 350W (22W max air-cooled, cont.) (75W max air-cooled, 5 min.)
Maximum Pulsed Peak Power (W)	2000
Noise Equivalent Power (mW)	
Standard Mode (10 Hz)	<150
High Speed Mode (20 kHz)	<200
Snapshot Mode (625 kHz)	<300
Maximum Power Density (kW/cm²)	1.2 (150W)
Maximum Peak Power Density (kW/cm²)	50 (1 ms; 1064 nm)
Maximum Energy Density (J/cm²)	30 (3 ms; 755 nm)
Rise Time (µs)	≤10
Fall Time (µs)	≤10
Detector Coating	HD
Diffuser	ZnSe
Active Area (mm)	25 dia.
Minimum Beam Size (mm)	Set by damage threshold
Maximum Beam Size[2] (mm)	18
Calibration Uncertainty (%)(k=2) at 810 nm	±2
Spectral Compensation Accuracy (%)	±5
Power Linearity[3] (%)	±2
Spatial Uniformity (%) (center 64% of aperture; 2.5 mm beam)	±5
Calibration Wavelength (nm)	801
Cooling Method	Water/Air (intermittent)
Cable Type	USB/RS-232
Cable Length	4.2 m (13.8 ft.)
Part Number	1315456 (USB) 1315457 (RS-232)

[1] Beam size dependent. See steady-state and intermittent power charts.
[2] See spatial uniformity and beam diameter charts for larger beams.
[3] Beam size and pulse length dependent. See peak power and pulse length charts.

PowerMax-Pro USB/RS HP 2K

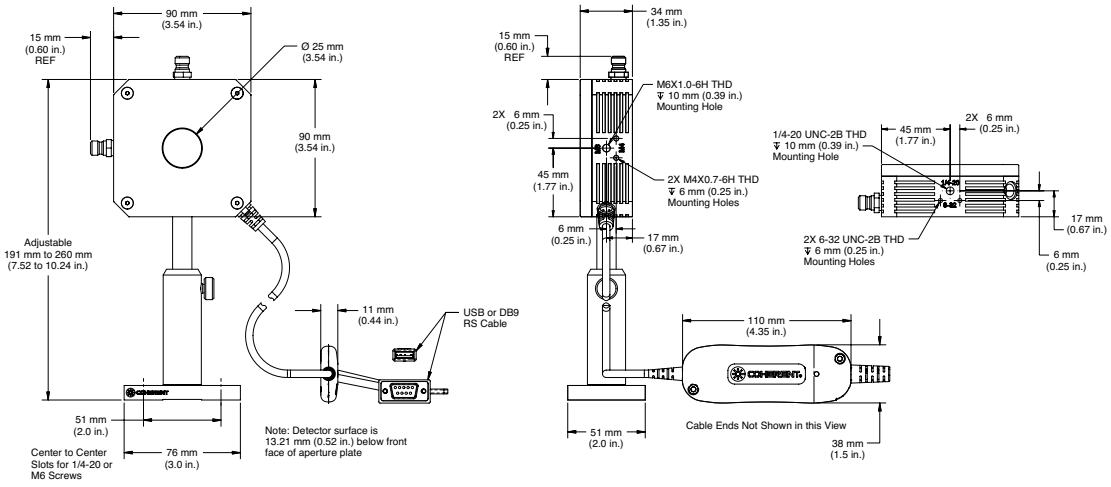

PowerMax-USB/RS Sensors

Product Overview

POWER & ENERGY
Power & Energy Meters
PowerMax-Pro Sensors
USB/RS Power Sensors
DB-25 Power Sensors
USB/RS Energy Sensors
DB-25 Energy Sensors
Custom & OEM
BEAM DIAGNOSTICS
CALIBRATION & SERVICE
Laser Cross-Reference Index
Model Name Index

LM-45, LM-10 and LM-3

Coherent PowerMax-USB sensors provide plug-and-play laser power measurement directly on a PC without the need for additional electronic instrumentation. The measurement circuitry typically found in a standalone meter has been reduced in size to the extent that it can now fit inside a USB connector. The circuitry and USB connector have been adapted into a 'PowerMax-USB' cable that can be integrated to most Coherent power sensors providing accurate power measurements of all types of CW and pulsed sources from the UV to Far IR.

This measurement platform can also be used to measure the energy in a long laser pulse (typically greater than 1 millisecond in pulse width) by integrating the output of a thermopile sensor.

The PowerMax-RS sensors incorporate the same circuitry inside an RS-232 connector to provide a convenient platform for integrating power measurement inside laser processing systems that often incorporate RS-232 inputs instead of USB.

PowerMax-USB Connector

Features

- **PowerMax-USB provides direct USB 2.0 connection to PC. Power provided via USB connection. Software and driver is compatible with Microsoft Windows 7, 8, and 10 (32-bit and 64-bit). The driver is qualified and signed by Microsoft.**
- **PowerMax-RS provides RS-232 connectivity. Power input provided via +5 VDC input.**
- **Instrumentation platform is compatible with thermopiles and optical sensors**
- **Displays beam position with position-sensing quadrant thermopiles (with LM-model sensors like LM-10)**
- **High resolution 24-bit A/D converter supports measurement accuracy equivalent to that found in Coherent's top-of-the-line LabMax meter**
- **Four digits of measurement resolution**
- **Sensors include spectral compensation for accurate use at wavelengths that differ from the calibration wavelength. Each device receives a unique spectral compensation curve specific to the absorption of its specific element, as well as transmission characterization of any associated optics.**
- **Thermopile sensors include a speed-up algorithm that speeds up the natural response of the thermopile detector without overshoot**
- **LED status indicators inside USB and RS-232 connectors provide health-and-status information**
- **Long pulse joules capability using thermopile sensors**

PowerMax-USB/RS Sensors

Product Overview

Software Features

PowerMax PC applications software is supplied free with sensor and includes the following features:

- **Trending, tuning, histogram**
- **Statistics (mean, minimum, maximum, and standard deviation) and log batch to file**
- **Display beam position on position-sensing thermopiles and log results to file**
- **Operate multiple devices simultaneously and perform synchronized ratiometery (A/B analysis). Trend and log results to file.**

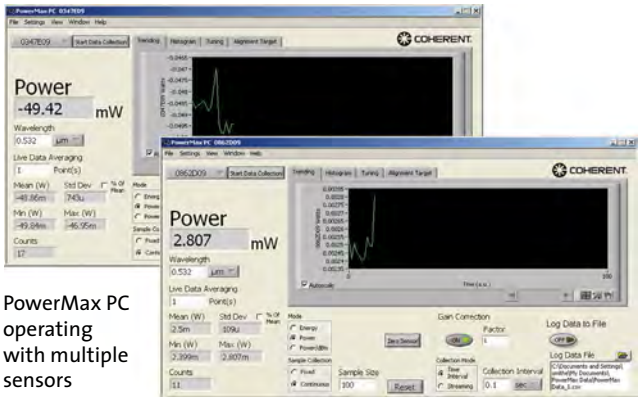

PowerMax PC operating with multiple sensors

For system integration and for implementations involving customer written software the sensors provide an in depth command set that is easy to access:

- **DLL driver supports simple ASCII host commands for remote interfacing using both USB and RS-232 sensors**
- **National Instruments LabVIEW drivers are supplied for easy LabVIEW integration**

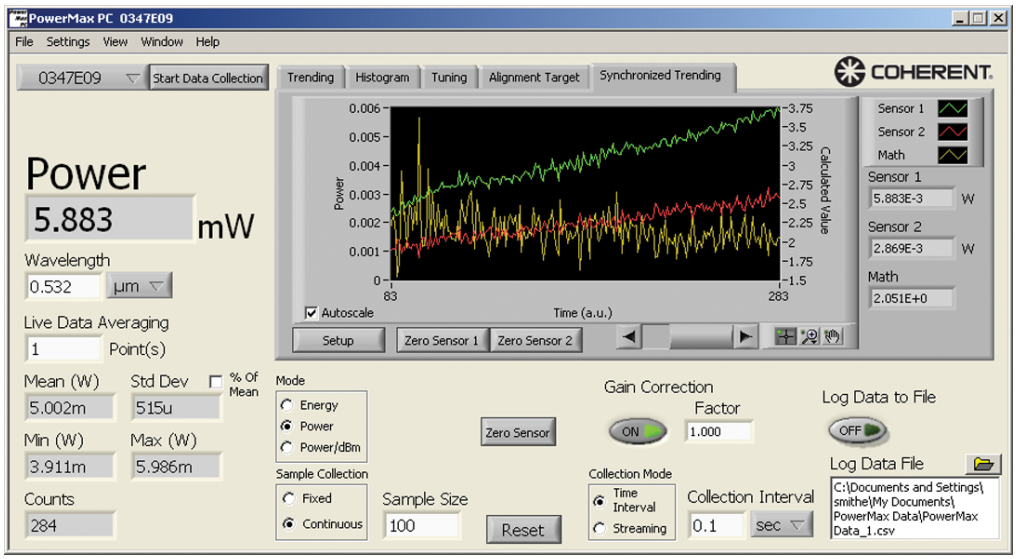

PowerMax PC in synchronized ratiometric trending mode

Coherent has two main types of thermopile sensors. The "LM Model" line utilizes a unique thermopile disk in which the thermocouples are split into four quadrants, allowing the sensors to provide beam position information in addition to power measurement. The "PM Model" line incorporates traditional thermopile disks that provide power measurement without beam position information. Both types of sensors can be used with the PowerMax-USB and PowerMax-RS sensors.

Quad Positioning Enabled

POWER & ENERGY
Power & Energy Meters
PowerMax-Pro Sensors
USB/RS Power Sensors
DB-25 Power Sensors
USB/RS Energy Sensors
DB-25 Energy Sensors
Custom & OEM
BEAM DIAGNOSTICS
CALIBRATION & SERVICE
Laser Cross-Reference Index
Model Name Index

PowerMax-USB/RS Sensors

Applying Wavelength Compensation Accuracy

POWER & ENERGY
Power & Energy Meters
PowerMax-Pro Sensors
USB/RS Power Sensors
DB-25 Power Sensors
USB/RS Energy Sensors
DB-25 Energy Sensors
Custom & OEM
BEAM DIAGNOSTICS
CALIBRATION & SERVICE
Laser Cross-Reference Index
Model Name Index

Overall measurement accuracy is a combination of calibration uncertainty (found in the sensor specification tables) and the wavelength compensation accuracy (found in the "Wavelength Compensation Accuracy" table, below).

The combined accuracy is based upon practices outlined in the National Institute of Standards Guidelines for Evaluating and Expressing Uncertainty (NIST Technical Note 1297, 1994 Edition). The combined accuracy of the measurement is calculated by using the law of propagation of uncertainty using the "root-sum-of-square" (square root of the sum of squares), sometimes described as "summing in quadrature" where:

$$\text{Measurement Accuracy} = \sqrt{U^2 + W^2}$$

where U = 'Percent Calibration Uncertainty' and W = 'Wavelength Accuracy'

Example:

PowerMax-USB LM-10 used at 1064 nm

U = 2%
W = 1.5%

$$\text{Measurement Accuracy} = \sqrt{2^2 + 1.5^2} = \sqrt{4 + 2.3} = 2.5\%$$

Coherent uses three primary coatings to capture the incident radiation on our thermal sensors. The specifications for each sensor list which coating is used. Typical wavelength ranges and response curves for these coatings are shown in the chart below. Each sensor contains a spectral curve generated from reflectance measurements taken with spectrometers. The reflectance data are converted into a wavelength compensation look-up table that is loaded into the sensor. This data is accessed by selecting a wavelength of operation in the software.

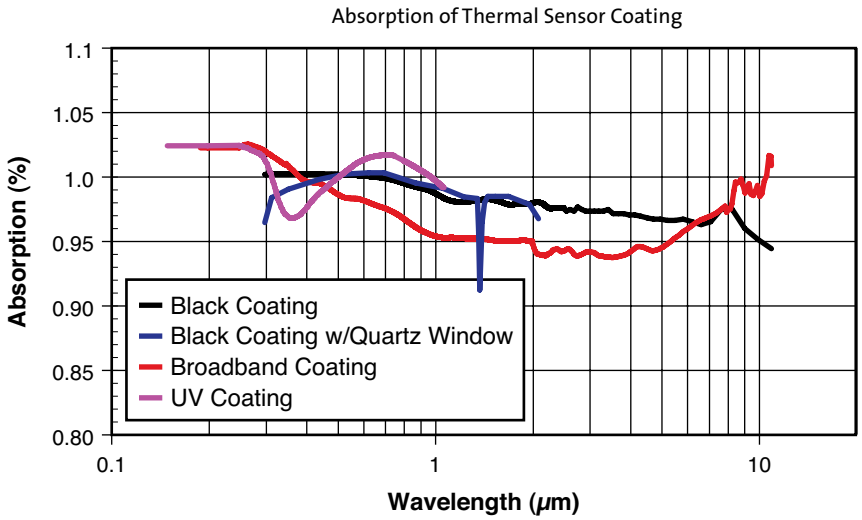

Wavelength Compensation Accuracy

Sensor	Wavelength Compensation Accuracy (%)	Calibration Wavelength (nm)
All PM-model and LM-model thermopiles	±1.5	10,600
PS-model	±1.5	514
UV/VIS optical sensor	±4% (325 nm to 900 nm) ±5% (900 nm to 1065 nm)	514

PowerMax-USB/RS Sensors

10 mW to 25W

LM-45, LM-10 and LM-3

Features

- **Thermopile detector element for high power measurements**
- **Measures beam position on detector surface**
- **Noise equivalent power down to 0.4 mW**
- **Large 16 mm and 19 mm apertures**

Thermopile sensors are a great all-purpose technology suitable for many lasers. They are used for measuring CW laser power, average power in pulsed lasers, and are often used to integrate the energy of long pulses. Thermopiles operate across a wide range of input powers, and unlike a photodiode-based sensor they will not saturate. These unique thermopiles incorporate a quadrant thermopile detector disk that enables them to sense the position of the laser beam on the detector surface while measuring the laser power. Fiber optic adapters are available on page 56.

Device Specifications

ISO/IEC 17025:2005

AC-1630

Model	LM-3	LM-10	LM-45
Wavelength Range (µm)		0.25 to 10.6	
Power Range	10 mW to 3W	10 mW to 10W	100 mW to 25W
Max. Intermittent Power (W)(<5 min.)	10	12	45
Long-Pulse Joules (J)	0.5 to 10	0.5 to 10	0.5 to 50
Noise Equivalent Power (mW)	0.4	0.4	2
Maximum Power Density (kW/cm²)		6	
Maximum Energy Density (mJ/cm²)		600 (10 ns, 1064 nm)	
Response Time (sec.)(0% to 95%)			
Speed-up On	2	2	3
Speed-up Off	4	4	4
Detector Coating		Broadband	
Detector Element		Thermopile	
Optic		None	
Detector Diameter (mm)	19	16	19
Calibration Uncertainty (%)(k=2)		±2	
Power Linearity (%)		±1	
Spectral Compensation Accuracy (%)		±1.5	
Long-Pulse Joules Accuracy (%)		±3	
Calibration Wavelength (nm)		10,600	
Cooling Method		Air	
Cable Type		USB and RS	
Cable Length (m)		2.5 (USB)/0.3 (RS)	
Part Number[1]	1168339 (USB) 1363752 (RS)	1168340 (USB)** 1168341 (RS)**	1168342 (USB)** 1211474 (RS)

[1] Software and post stand included.

**C24 Quick Ship program: eligible for next business day shipment.

LM-3

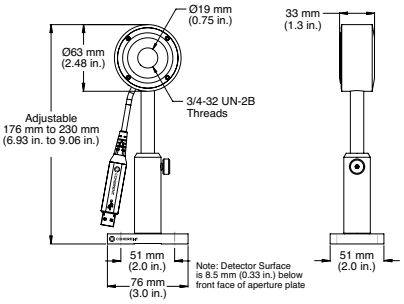

LM-10

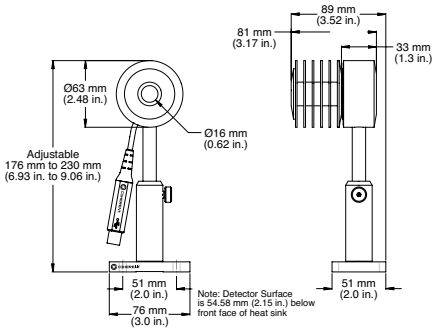

LM-45

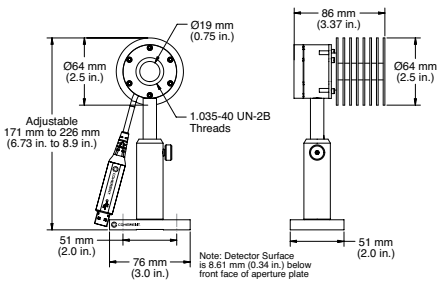

PowerMax-USB/RS Sensors

100 mW to 200W

POWER & ENERGY
Power & Energy Meters
PowerMax-Pro Sensors
USB/RS Power Sensors
DB-25 Power Sensors
USB/RS Energy Sensors
DB-25 Energy Sensors
Custom & OEM
BEAM DIAGNOSTICS
CALIBRATION & SERVICE
Laser Cross-Reference Index
Model Name Index

LM-20, LM-100 and LM-150 LS

Features

- Spectrally flat from 0.25 µm to 10.6 µm
- 19 mm apertures
- FC and SMA fiber connectors available (see page 56)

Quad Positioning Enabled

The LM-20 is designed for embedded use and must be mounted on a heat sink. The LM-150 LS is designed for intermittent operation.

LM-150 LS Power Duration

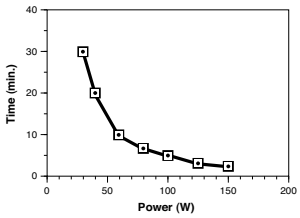

Device Specifications

ISO/IEC 17025:2005

AC-1630

Model	LM-20	LM-100	LM-150 LS
Wavelength Range (µm)		0.25 to 10.6	
Power Range	100 mW to 20W	100 mW to 100W	100 mW to 150W
Long-Pulse Joules (J)		0.5 to 10	
Noise Equivalent Power (mW)	3	5	3
Maximum Power Density (kW/cm²)		6	
Maximum Energy Density (mJ/cm²)		600 (10 ns, 1064 nm)	
Detector Coating		Broadband	
Detector Element		Thermopile	
Optic		None	
Detector Diameter (mm)		19	
Calibration Uncertainty (%)(k=2)	±2	±2	±5
Power Linearity (%)		±1	
Spectral Compensation Accuracy (%)		±1.5	
Long-Pulse Joules Accuracy (%)		±3	
Calibration Wavelength (nm)		10,600	
Cooling Method		Air	
Cable Type		USB	
Cable Length (m)		2.5	
Part Number[1]	1174270	1193300	1275678

[1] Software and post stand included.

LM-20

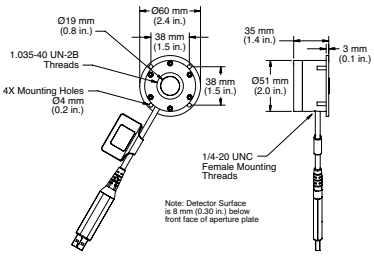

LM-100

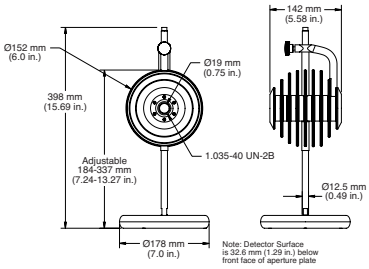

LM-150 LS

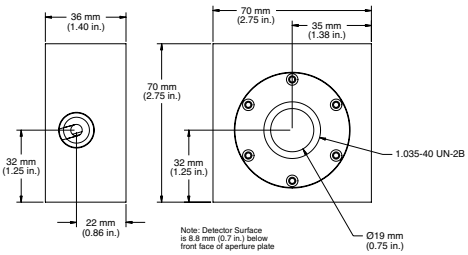

PowerMax-USB/RS Sensors

100 mW to 200W

LM-200

Features

- Spectrally flat from 0.25 µm to 10.6 µm
- 19 mm apertures
- FC and SMA fiber connectors available (see page 56)

The LM-200 is fan-cooled and is available in 110 VAC and 220 VAC configurations.

Device Specifications

ISO/IEC 17025:2005

Model	LM-200	
Wavelength Range (µm)	0.25 to 10.6	
Power Range	100 mW to 50W (w/o fan) 1W to 200W (with fan)	
Long-Pulse Joules (J)	0.5 to 10	
Noise Equivalent Power (mW)	5 (w/o fan) 100 (with fan)	
Maximum Power Density (kW/cm²)	6	
Maximum Energy Density (mJ/cm²)	600 (10 ns, 1064 nm)	
Detector Coating	Broadband	
Detector Element	Thermopile	
Optic	None	
Detector Diameter (mm)	19	
Calibration Uncertainty (%)(k=2)	±5	
Power Linearity (%)	±1	
Spectral Compensation Accuracy (%)	±1.5	
Long-Pulse Joules Accuracy (%)	±3	
Calibration Wavelength (nm)	10,600	
Cooling Method	Fan	
Cable Type	USB	RS
Cable Length (m)	2.5	0.3
Part Number[1]	1193407 (110V) 1195840 (220V)	1258401 (110V) 1320565 (220V)

[1] Software and post stand included.

LM-200

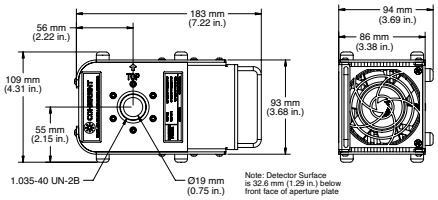

PowerMax-USB/RS Sensors

50W to 5 kW

POWER & ENERGY
Power & Energy Meters
PowerMax-Pro Sensors
USB/RS Power Sensors
DB-25 Power Sensors
USB/RS Energy Sensors
DB-25 Energy Sensors
Custom & OEM
BEAM DIAGNOSTICS
CALIBRATION & SERVICE
Laser Cross-Reference Index
Model Name Index

LM-1000 and BeamFinder

Features

- Water-cooled
- Spectrally flat from 0.25 µm to 10.6 µm
- 35 mm to 56 mm apertures

These position sensing kilowatt thermopile sensors are water-cooled for measuring laser output up to 3 kW and are excellent for use with CO_2 and Nd:YAG lasers. Tap or distilled cooling water is recommended with these sensors - DI water and most common additives will not have any adverse effects. A technical note is available with more details. Flow rates are power dependent and range from 0.5 to 4 gallons per minute; pressure depends upon flow rate and ranges from 3 to 40 PSI (visit product pages at www.Coherent.com/LMC for more technical details). See page 56 for RS model power supply accessory.

Device Specifications

ISO/IEC 17025:2005

AC-1630

Model	BeamFinder	LM-1000	LM-5000
Wavelength Range (µm)		0.25 to 10.6	
Power Range (W)	50 to 1000	50 to 1000	50 to 5000
Noise Equivalent Power (mW)		20	
Maximum Power Density[1] (kW/cm²)		1 to 2.5	
Maximum Energy Density (mJ/cm²)		500	
Response Time (sec.)(0% to 95%)			
Speed-up On		4	
Speed-up Off		6	
Detector Coating		Broadband	
Detector Element		Thermopile	
Detector Diameter (mm)	35	38	56
Calibration Uncertainty (%)(k=2)		±5	
Power Linearity (%)		±1	
Spectral Compensation Accuracy (%)		±1.5	
Calibration Wavelength (nm)		10,600	
Cooling Method		Water	
Cable Type		USB and RS	
Cable Length (m)		2.5 (USB)/0.3 (RS)	
Part Number[2]	1233118 (USB)	1174268 (USB) 1180872 (RS)	1174269 (USB) 1181653 (RS)

[1] The damage resistance of the coating is dependent upon the beam size and profile, the average power level, and the water flow rate. Contact Coherent or your local representative for details related to your application.
[2] Software, water fittings and post stand included with LM-1000 and LM-5000.

BeamFinder

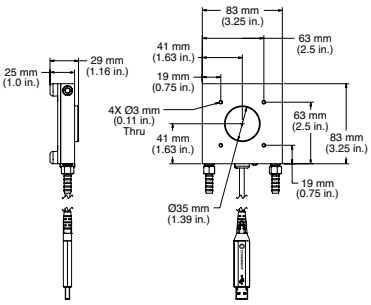

LM-1000

USB

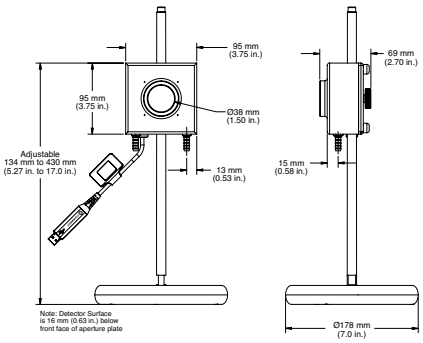

LM-5000

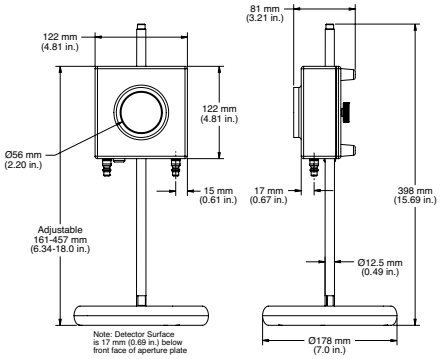

PowerMax-USB/RS Sensors

100 µW to 1W

PS10 and PS19Q

Features

- **Thermally stabilized design for low power sensitivity**
- **Noise equivalent power down to 3 µW**
- **Spectrally flat; good for broadband light sources**

The PS10 and PS19 model sensors are thermally stabilized, amplified thermopile power sensors with a broad spectral response, high sensitivity, and a large active area. These sensors are ideal for measuring laser diodes, HeNe and HeCd lasers, and small ion lasers. The PS10 model includes a light tube mounted to the front of the housing, which minimizes the effects of background radiation. The light tube can be removed and replaced by FC or SMA fiber connectors (see Accessories - page 56). Where optimum stability is required, specify the PS19Q, which include a wedged quartz window for applications from 0.3 to 2.1 µm. The quartz window more effectively eliminates thermal background radiation and the effects of air currents.

Device Specifications

ISO/IEC 17025:2005

AC-1630

Model	PS10	PS10Q	PS19Q	PS19
Wavelength Range (nm)	190[3] to 11,000	300 to 2100	300 to 2100	190[3] to 11,000
Power Range	100 µW to 1W		100 µW to 1W	100 µW to 1W
Max. Intermittent Power (W)(<5 min.)	3			
Long-pulse Joules (J)	0.001 to 1			
Noise Equivalent Power (µW)	3	3	3	5
Maximum Thermal Drift[1] (µW)	±40	±25	±25	±400
Maximum Power Density (W/cm²)	500			
Maximum Energy Density (mJ/cm²)	50 (10 ns, 1064 nm)			
Response Time (sec.)(0% to 95%)				
Speed-up On	2			
Speed-up Off	3			
Detector Coating	Black			
Detector Element	Thermopile			
Optic	None	Quartz	Quartz	None
Detector Diameter (mm)	10	10	19	19
Calibration Uncertainty (%)(k=2)	±1			
Power Linearity (%)	±1			
Spectral Compensation Accuracy (%)	±1.5			
Long-pulse Joules Accuracy (%)	±3			
Calibration Wavelength (nm)	514			
Cooling Method	Air			
Cable Type	USB and RS			
Cable Length (m)	2.5 (USB)/0.3 (RS)			
Part Number[2]	1174260 (USB)**	1287077 (USB) 1288992 (RS)	1168343 (USB)** 1179504 (RS)	1174261 (USB)**

[1] Power stability over 30 minutes in typical lab environment.
[2] Software and post stand included.
[3] 190 nm to 300 nm operation restricted to <100 mW average power and <250 W/cm² power density.
**C24 Quick Ship program: eligible for next business day shipment.

PS10Q/PS10

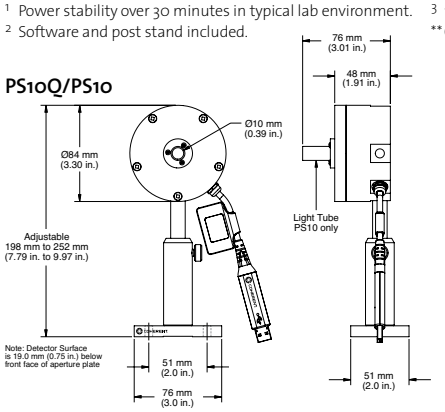

PS19Q/PS19

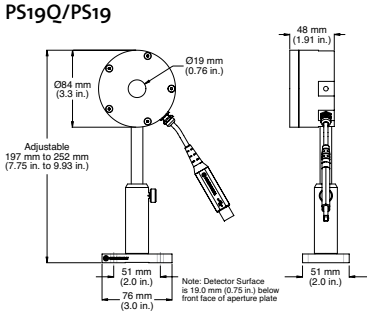

PowerMax-USB/RS Sensors

500 µW to 2W

POWER & ENERGY
Power & Energy Meters
PowerMax-Pro Sensors
USB/RS Power Sensors
DB-25 Power Sensors
USB/RS Energy Sensors
DB-25 Energy Sensors
Custom & OEM
BEAM DIAGNOSTICS
CALIBRATION & SERVICE
Laser Cross-Reference Index
Model Name Index

PM3

Features

- **Amplified thermopile for low power measurements**
- **Noise equivalent power down to 20 µW**
- **Spectrally flat; good for broadband light sources**

The PM3 model is an amplified thermopile with a high sensitivity and a very broad spectral response. This model has a slightly higher power range and a more compact housing than the PS10 and PS19 model sensors. For improved stability, the PM3Q adds a quartz window to help reduce the effects of background radiation and air currents.

Device Specifications

ISO/IEC 17025:2005

AC-1630

Model	PM3	PM3Q
Wavelength Range (nm)	190[3] to 11,000	300 to 2000
Power Range	500 µW to 2W	
Max. Intermittent Power (W)(<5 min.)	3	
Long-pulse Joules (J)	0.001 to 1	
Noise Equivalent Power (µW)	20	
Maximum Thermal Drift[1] (µW)	±1000	±500
Maximum Power Density (W/cm²)	500	
Maximum Energy Density (mJ/cm²)	50 (10 ns, 1064 nm)	
Response Time (sec.)(0% to 95%)		
Speed-up On	2	
Speed-up Off	4	
Detector Coating	Black	
Detector Element	Thermopile	
Optic	None	Quartz
Detector Diameter (mm)	19	10
Calibration Uncertainty (%)(k=2)	±1	
Power Linearity (%)	±1	
Spectral Compensation Accuracy (%)	±1.5	
Long-pulse Joules Accuracy (%)	±3	
Calibration Wavelength (nm)	10,600	514
Cooling Method	Air	
Cable Type	USB	
Cable Length (m)	2.5	
Part Number[2]	1174263 (USB)	1191133 (USB)

[1] Power stability over 30 minutes in typical lab environment.
[2] Software and post stand included.
[3] 190 nm to 300 nm operation restricted to <100 mW average power and <250 W/cm² power density.

PM3

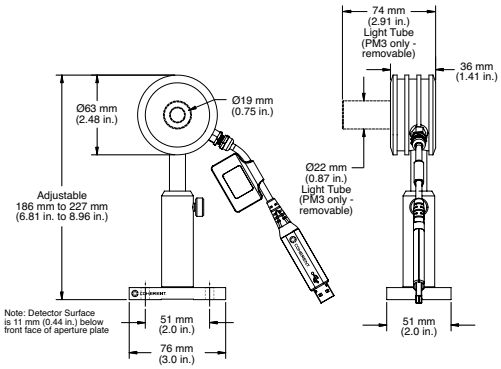

PowerMax-USB/RS Sensors

5 µW to >100 mW

UV/VIS Wand and UV/VIS Sensor

Features

- **Large 8 mm and 10 mm apertures**
- **High-sensitivity Silicon photodiode**
- **Low power measurements down to 5 µW (wavelength dependent)**
- **Spectral response from 325 nm to 1065 nm**

The PowerMax-USB UV/VIS Quantum sensors incorporate a Silicon photodiode, for measurement of power from 5 µW to several hundred milliwatts. The measureable power varies significantly by wavelength. See the chart on the next page.

Spectrally calibrated filters are used to attenuate the laser beam, thus allowing for a higher average power measurement than is typically possible with a photodiode. They work with CW (continuous wave) as well as pulsed sources greater than 100 pps. The standard UV/VIS has a removable nose cone that can be used to reduce stray light, which is helpful when measuring on the low end of the power range, and the Wand UV/VIS incorporates a thin profile metal enclosure to fit into tight locations. See page 56 for Wand sensor fiber adapters.

Device Specifications

ISO/IEC 17025:2005

AC-1630

Model	UV/VIS	Wand UV/VIS
Wavelength Range (nm)	325 to 1065	
Power Range[1]	5 µW to >100 mW	8.5 µW to >140 mW
Noise Equivalent Power (nW)	100	170
Maximum Power Density (W/cm²)	20	
Response Time (sec.)		
Speed-up On	-	
Speed-up Off (0% to 100%)	0.1	0.5
Detector Element	Silicon photodiode	
Optic	ND2	Diffuse Quartz
Detector Diameter (mm)	10	8
Calibration Uncertainty (%)(k=2)	±1	
Power Linearity (%)	±1	
Spectral Compensation Accuracy (%)	±4 (325 to 900 nm) ±5 (900 to 1065 nm)	
Calibration Wavelength (nm)	514	
Cooling Method	Air	
Cable Type	USB	
Cable Length (m)	2.5	
Part Number[2]	1168337**	1299161**

[1] Wavelength dependent, see chart on next page.
[2] Software and post stand included.
** C24 Quick Ship program: eligible for next business day shipment.

UV/VIS Quantum

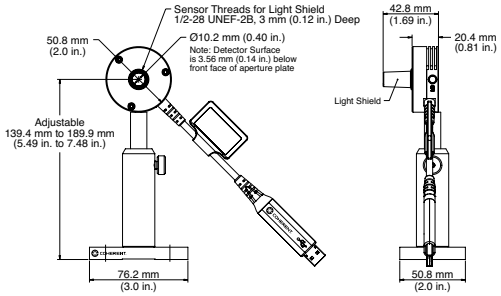

Wand UV/VIS Quantum

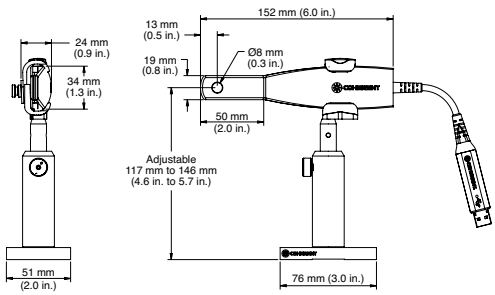

PowerMax-USB/RS Sensors

UV/VIS Quantum Overview

POWER & ENERGY
Power & Energy Meters
PowerMax-Pro Sensors
USB/RS Power Sensors
DB-25 Power Sensors
USB/RS Energy Sensors
DB-25 Energy Sensors
Custom & OEM
BEAM DIAGNOSTICS
CALIBRATION & SERVICE
Laser Cross-Reference Index
Model Name Index

We incorporate spectral compensation in the PowerMax-USB UV/VIS sensors to provide accurate measurements across the 325 nm to 1065 nm spectrum. Because the spectral response of the filter and photodiode varies significantly across this wavelength range it is important to check the maximum measureable power at the wavelength of use to make sure the sensor is not being saturated.

This curve plots the maximum measurable power, which is the saturation level of the photodiode, as well as the minimum recommended power level, by wavelength.

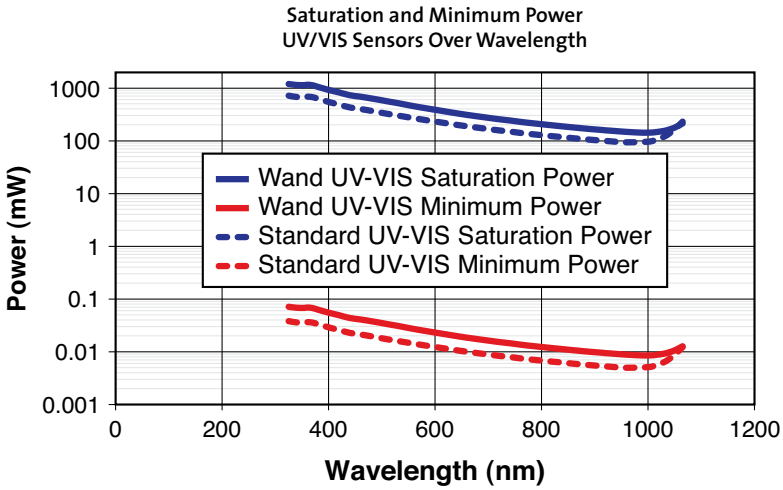

Angular Sensitivity

The following curves plot the sensitivity to incident angle, and numerical aperture in the case of non-collimated beams.

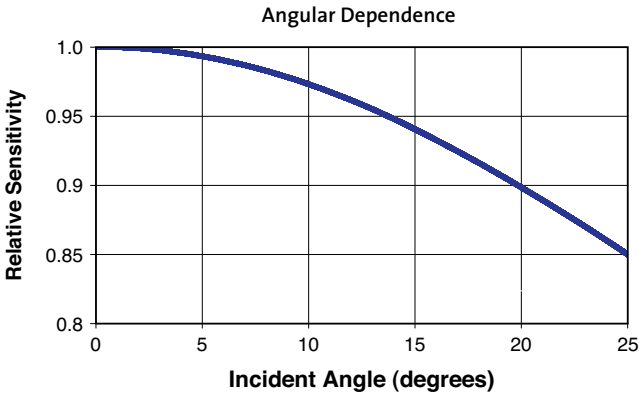

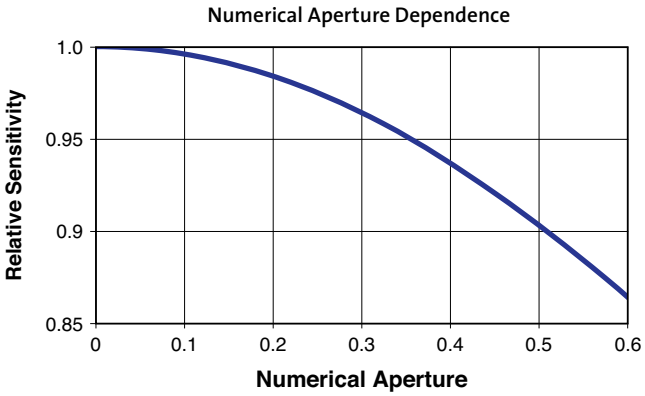

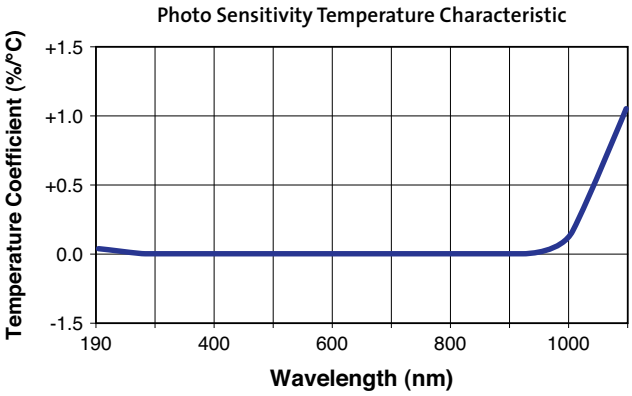

Measurement Linearity

Like all silicon photodiodes, the UV/VIS Quantum sensor has temperature sensitivity in the infrared region.

At 1064 nm, for example, it has a 0.5%/°C thermal coefficient. Measurement error of up to 2% are present at 1064 nm after a 10 minute warm-up time due to the electronics inside the sensor, and additional error can be present if the ambient measurement environment differs from the calibration wavelength listed on the calibration certificate.

In practice, wavelengths shorter than 1000 nm have insignificant effects due to temperature.

See the chart at left to reference the thermal coefficient at the wavelength of use.

PowerMax-USB/RS Sensors

5 mW to 30W

PM2, PM10 and PM30

Features

- Convective air-cooled
- Spectrally flat from 0.19 µm to 11 µm
- Noise equivalent power down to 0.2 mW
- 19 mm aperture

These thermopile sensors are used to measure CW and pulsed lasers from 5 mW up to 30W average power output. These sensors are able to dissipate heat via convection cooling, which makes them convenient to use.

Device Specifications

ISO/IEC 17025:2005

AC-1630

Model	PM2	PM10	PM30
Wavelength Range (µm)		0.19 to 11	
Power Range	5 mW to 2W	5 mW to 10W	10 mW to 30W
Long-Pulse Joules Range (J)	0.5 to 2	0.5 to 10	0.5 to 50
Max. Intermittent Power (<5 min.)(W)	5	30	50
Noise Equivalent Power (mW)	0.2	0.2	0.5
Maximum Power Density (kW/cm²)		6	
Maximum Energy Density (mJ/cm²)		600 (10 ns, 1064 nm)	
Response Time (sec.)(0% to 95%)			
Speed-up On	2	2	3
Speed-up Off	4	4	4
Detector Coating		Broadband	
Detector Element		Thermopile	
Optic		None	
Detector Diameter (mm)		19	
Calibration Uncertainty (%)(k=2)		±2	
Power Linearity (%)		±1	
Spectral Compensation Accuracy (%)		±1.5	
Long-Pulse Joules Accuracy (%)		±3	
Calibration Wavelength (nm)		10,600	
Cooling Method		Air	
Cable Type		USB and RS	
Cable Length (m)		2.5 (USB)/0.3 (RS)	
Part Number[1]	1174264 (USB)	1174262 (USB)**	1174257 (USB)** 1174258 (RS)

[1] Software and post stand included.

**C24 Quick Ship program: eligible for next business day shipment.

PM2

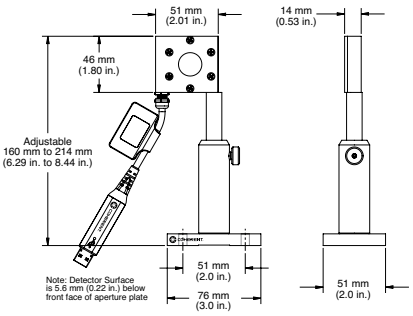

PM10

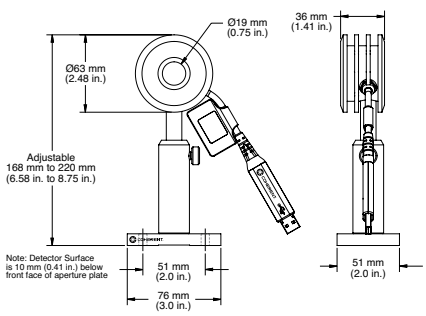

PM30

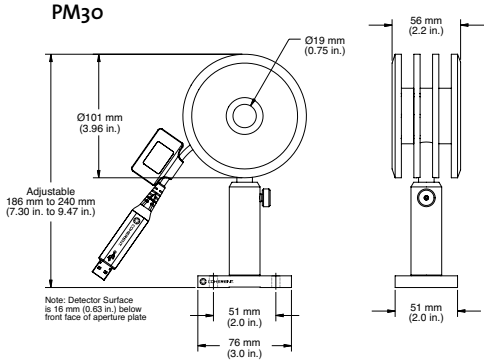

PowerMax-USB/RS Sensors

5 mW to 30W

POWER & ENERGY
Power & Energy Meters
PowerMax-Pro Sensors
USB/RS Power Sensors
DB-25 Power Sensors
USB/RS Energy Sensors
DB-25 Energy Sensors
Custom & OEM
BEAM DIAGNOSTICS
CALIBRATION & SERVICE
Laser Cross-Reference Index
Model Name Index

PM2X, PM10X and PM30X

Features

- Convective air-cooled
- UV coating is optimized for DUV
- Noise equivalent power down to 0.2 mW
- 19 mm aperture

The following sensors are similar to models shown on previous pages, except they incorporate a UV coating that is optimized for use at ultraviolet wavelengths. Spectral compensation allows the sensors to be used from 157 nm to 1064 nm.

Device Specifications

ISO/IEC 17025:2005

AC-1630

Model	PM2X	PM10X	PM30X
Wavelength Range (µm)		0.15 to 1	
Power Range	5 mW to 2W	5 mW to 10W	10 mW to 30W
Long-Pulse Joules Range (J)	0.5 to 2	0.5 to 10	0.5 to 50
Max. Intermittent Power (<5 min.)(W)	5	30	50
Noise Equivalent Power (mW)	0.2	0.2	0.5
Maximum Power Density (kW/cm²)		6	
Maximum Energy Density (mJ/cm²)		600 (10 ns, 1064 nm)	
Response Time (sec.)(0% to 95%)			
Speed-up On	2	2	3
Speed-up Off	4	4	4
Detector Coating		UV	
Detector Element		Thermopile	
Optic		None	
Detector Diameter (mm)		19	
Calibration Uncertainty (%)(k=2)		±1	
Power Linearity (%)		±1	
Spectral Compensation Accuracy (%)		±1.5	
Long-Pulse Joules Accuracy (%)		±3	
Calibration Wavelength (nm)		514	
Cooling Method		Air	
Cable Type		USB and RS	
Cable Length (m)		2.5 (USB)/0.3 (RS)	
Part Number[1]	1257617 (USB) 1230323 (RS)	1184874 (USB) 1236447 (RS)	1263294 (USB) 1174259 (RS)

[1] Software and post stand included.

PM2X

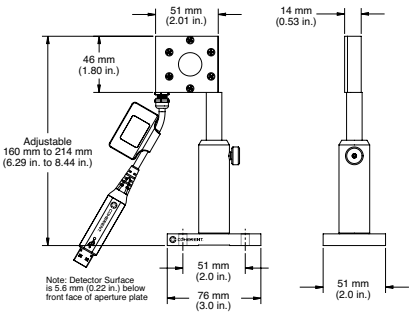

PM10X

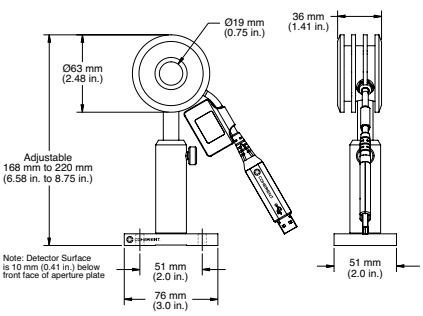

PM30X

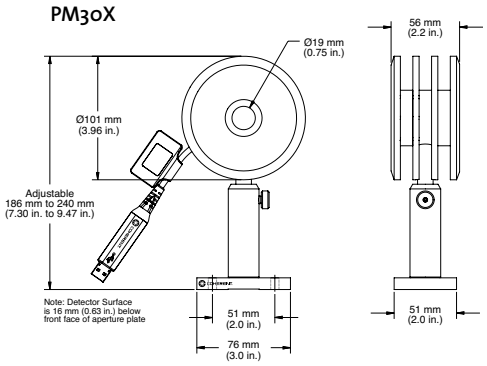

PowerMax-USB/RS Sensors

10 mW to 150W

PM10-19C, PM150-50C, PM150-19C and PM100-19C

Features

- **Spectrally flat from 0.19 µm to 11 µm**
- **Noise equivalent 0.2 mW to 1 mW**
- **19 mm and 50 mm apertures**

The compact sensors must be water-cooled in order to achieve their full power specification during continuous operation. They can also be mounted to a heat sink or used standalone for intermittent use without water-cooling. Tap or distilled cooling water at a flow rate of 0.2 gallons per minute is recommended with these sensors - DI water and most common additives will not have any adverse effects. A technical note is available with more details. They are also very useful for air-cooled energy measurement of long-pulse (>1 ms) lasers using the long-pulsed Joules mode. See page 56 for RS model power supply accessory. Water fittings are included. For 150W air-cooled choose the PM150-50 sensor.

Device Specifications

ISO/IEC 17025:2005

AC-1630

Model	PM10-19C	PM100-19C	PM150-19C	PM150-50C
Wavelength Range (µm)	0.19 to 11			
Power Range (water-cooled)	10 mW to 10W	300 mW to 100W	300 mW to 150W	300 mW to 150W
Max. Intermittent Power (W)(<5 min.)	5 (air-cooled)	100	20 (air-cooled)	80 (air-cooled)
Long-Pulse Joules (J)	0.5 to 10	1 to 100	1 to 150	1 to 150
Noise Equivalent Power (mW)	0.2	1	1	1
Maximum Power Density (kW/cm^2)	6			
Maximum Energy Density (mJ/cm^2)	600 (10 ns, 1064 nm)			
Response Time (sec.)(0% to 95%)				
Speed-up On	2	2	2	3
Speed-up Off	4	4	4	12
Detector Coating	Broadband			
Detector Element	Thermopile			
Optic	None			
Detector Diameter (mm)	19	19	19	50
Calibration Uncertainty (%)(k=2)	±2			
Power Linearity (%)	±1			
Spectral Compensation Accuracy (%)	±1.5			
Long-Pulse Joules Accuracy (%)	±3			
Calibration Wavelength (nm)	10,600			
Cooling Method	Water/Air (intermittent)			
Cable Type	USB and RS			
Cable Length (m)	2.5 (USB)/0.3 (RS)			
Part Number	1168344 (USB) 1168345 (RS)	1288940 (USB)	1168346 (USB) 1168347 (RS)**	1168348 (USB)** 1168349 (RS)**

** C24 Quick Ship program: eligible for next business day shipment.

PM10-19C/PM150-19C (shown with PowerMax-RS cable)

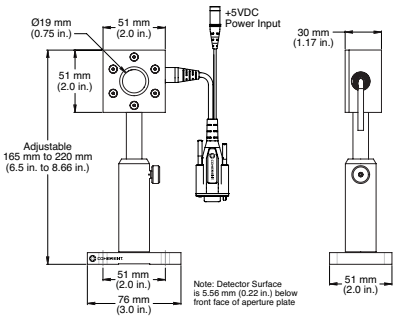

PM150-50C (shown with PowerMax-RS cable)

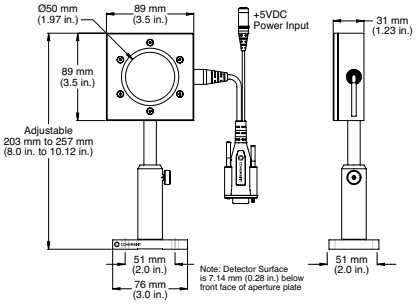

PM100-19C

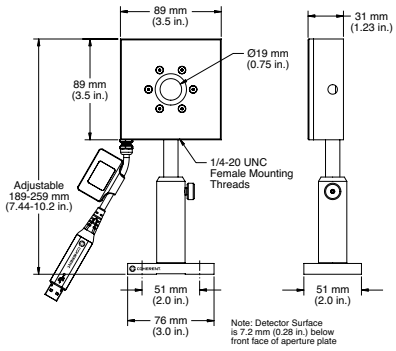

PowerMax-USB/RS Sensors

OEM Thermopiles Overview

POWER & ENERGY
Power & Energy Meters
PowerMax-Pro Sensors
USB/RS Power Sensors
DB-25 Power Sensors
USB/RS Energy Sensors
DB-25 Energy Sensors
Custom & OEM
BEAM DIAGNOSTICS
CALIBRATION & SERVICE
Laser Cross-Reference Index
Model Name Index

PM150-50C and PM150-19C

Unlike the PowerMax-USB that is powered through a PC's USB 2.0 connection, the PowerMax-RS sensors must powered externally with a +5 VDC power source. An external power supply may be plugged into the 6 mm barrel receptacle, or alternatively, for custom OEM installations power may be provided on Pin 1 through the DE-9 connector. Additional information concerning integration of the OEM thermopiles, including detailed housing drawings, can be found below.

PowerMax-RS Information

PC Interface: RS-232
Connector: DE-9 female
Cable length: 300 mm. Use standard RS-232 cable to connect device to PC.
Communication: Pin 2: Receive Data (into PC); Pin 3: Transmit Data (out of PC); Pin 5 – Signal Ground
Required Power: +5 VDC ±5% with less than 100 mV RMS noise
Current draw: <300 mA
Power input connector: 6 mm barrel with 2 mm pin, center positive
Power supply: Optional equipment, order #1105557 for UL and PSE certified power supply with power cord.
Alternate OEM power input: +5 VDC on Pin 1; Pin 5 – Ground (shared with Signal Ground)

Mounting Hole Locations

PM10-19C/PM150-19C

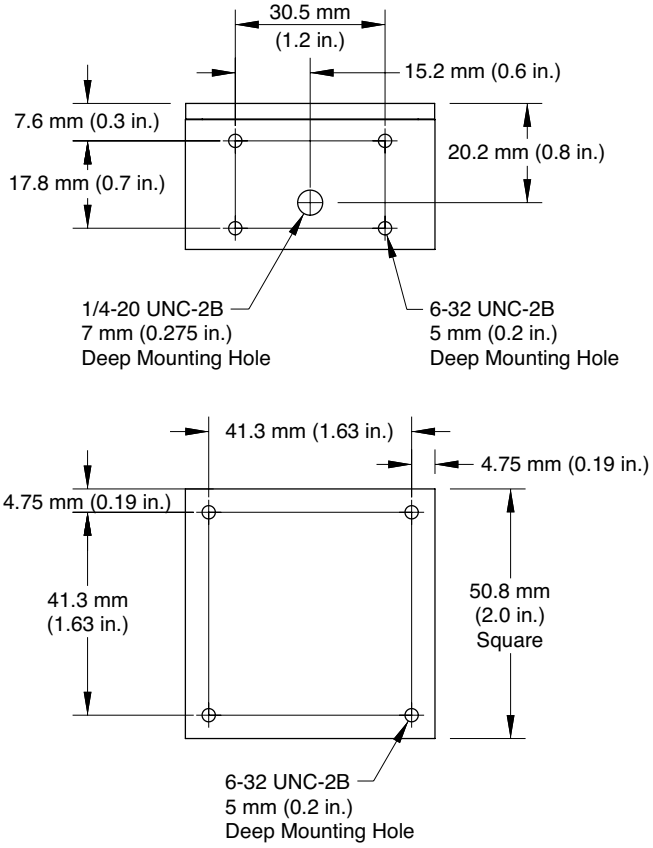

PM150-50C

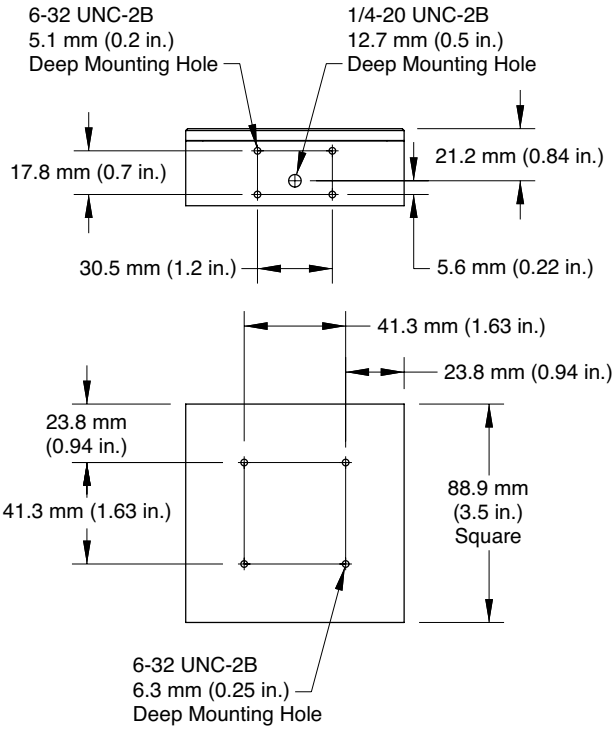

PowerMax-USB/RS Sensors

300 mW to 1 kW

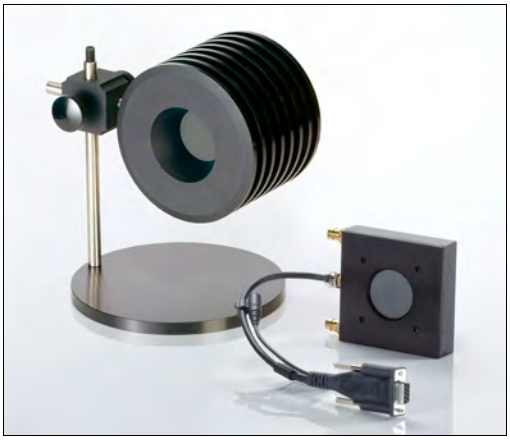

PM150-50 and PM1K-36C

Features

- **Spectrally flat from 0.19 µm to 11 µm**
- **Large 36 mm and 50 mm apertures**

The PM150-50 is our highest rated sensor that is connectively air-cooled.

Tap or distilled cooling water is recommended with these sensors - DI water and most common additives will not have any adverse effects. A technical note is available with more details. Flow rates are power dependent and range from 0.5 to 4 gallons per minute; pressure depends upon flow rate and ranges from 3 to 40 PSI (visit product pages at www.Coherent.com/LMC for more technical details). See page 56 for RS model power supply accessory.

Device Specifications

ISO/IEC 17025:2005

AC-1630

Model	PM150-50	PM1K-36C
Wavelength Range (µm)	0.19 to 11	0.25 to 10.6
Power Range (water-cooled)	300 mW to 150W	50 to 1000
Max. Intermittent Power (W)(<5 min.)	300	3000[1]
Noise Equivalent Power (mW)	1	20
Maximum Power Density (kW/cm^2)	6	1 to 2.5[2]
Maximum Energy Density (mJ/cm^2)	600 (10 ns, 1064 nm)	600
Response Time (sec.)(0% to 95%)		
Speed-up On	5	4
Speed-up Off	13	6
Detector Coating	Broadband	
Detector Element	Thermopile	
Detector Diameter (mm)	50	36
Calibration Uncertainty (%)(k=2)	±2	±5
Power Linearity (%)	±1	
Spectral Compensation Accuracy (%)	±1.5	
Calibration Wavelength (nm)	10,600	
Cooling Method	Air	Water
Cable Type	USB	USB and RS
Cable Length (m)	2.5 (USB)/0.3 (RS)	
Part Number	1223336 (USB) 1317151 (RS)	1174266 (USB)[3] 1174267 (RS)[3]**

[1] Intermittent power levels may be sustainable for longer than 5 minutes when used with lasers with large diameter, non-Gaussian beam profiles. Monitor closely for coating damage if used longer than five minutes at higher powers.

[2] The damage resistance of the coating is dependent upon the beam size and profile, the average power level, and the water flow rate. Contact Coherent or your local representative for details related to your application.

[3] Software, water fittings and post stand included with kW sensors.

** C24 Quick Ship program: eligible for next business day shipment.

PM1K-36C

USB

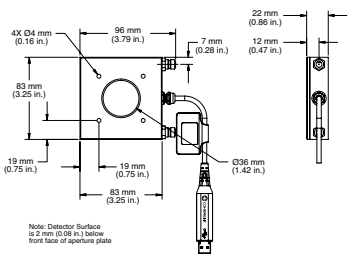

PM150-50

USB

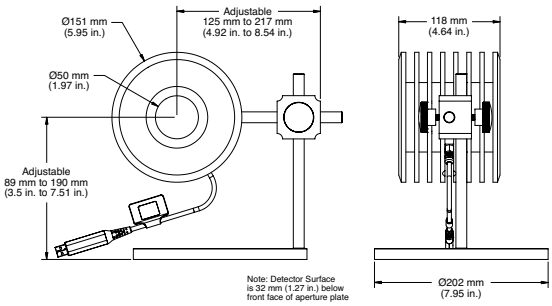

POWER & ENERGY
Power & Energy Meters
PowerMax-Pro Sensors
USB/RS Power Sensors
DB-25 Power Sensors
USB/RS Energy Sensors
DB-25 Energy Sensors
Custom & OEM
BEAM DIAGNOSTICS
CALIBRATION & SERVICE
Laser Cross-Reference Index
Model Name Index

PowerMax-USB/RS Sensors

50W to 5 kW

POWER & ENERGY
Power & Energy Meters
PowerMax-Pro Sensors
USB/RS Power Sensors
DB-25 Power Sensors
USB/RS Energy Sensors
DB-25 Energy Sensors
Custom & OEM
BEAM DIAGNOSTICS
CALIBRATION & SERVICE
Laser Cross-Reference Index
Model Name Index

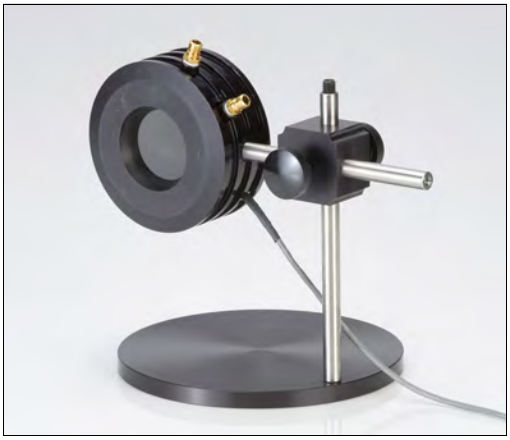

PM1K

Features

- **Water-cooled**
- **Spectrally flat from 0.25 µm to 10.6 µm**
- **Large 36 mm to 50 mm apertures**

These kilowatt thermopile sensors are water-cooled for measuring laser output up to 5 kW and are excellent for use with CO_2 and Nd:YAG lasers. Tap or distilled cooling water is recommended with these sensors - DI water and most common additives will not have any adverse effects. A technical note is available with more details. Flow rates are power dependent and range from 0.5 to 4 gallons per minute; pressure depends upon flow rate and ranges from 3 to 40 PSI (visit product pages at www.Coherent.com/LMC for more technical details). See page 56 for RS model power supply accessory.

Device Specifications

ISO/IEC 17025:2005

AC-1630

Model	PM1K	PM3K	PM5K
Wavelength Range (µm)		0.25 to 10.6	
Power Range (W)	50 to 1000	50 to 3000	100 to 5000
Max. Intermittent Power[1] (<5 min.)(W)	3000	5000	10,000
Noise Equivalent Power (mW)		20	
Maximum Power Density[2] (kW/cm²)		1 to 2.5	
Maximum Energy Density (mJ/cm²)		600	
Response Time (sec.)(0% to 95%)			
Speed-up On		4	
Speed-up Off		6	
Detector Coating		Broadband	
Detector Element		Thermopile	
Detector Diameter (mm)		50	
Calibration Uncertainty (%)(k=2)		±5	
Power Linearity (%)		±1	
Spectral Compensation Accuracy (%)		±1.5	
Calibration Wavelength (nm)		1070	
Cooling Method		Water	
Cable Type		USB and RS	
Cable Length (m)		2.5 (USB)/0.3 (RS)	
Part Number[3]	1232163 (USB)	1276824 (USB) 1191293 (RS)	1215999 (USB)

[1] Intermittent power levels may be sustainable for longer than 5 minutes when used with lasers with large diameter, non-Gaussian beam profiles. Monitor closely for coating damage if used longer than five minutes at higher powers.
[2] The damage resistance of the coating is dependent upon the beam size and profile, the average power level, and the water flow rate. Contact Coherent or your local representative for details related to your application.
[2] Software, water fittings and post stand included with kW sensors.

PM1K/PM3K/PM5K

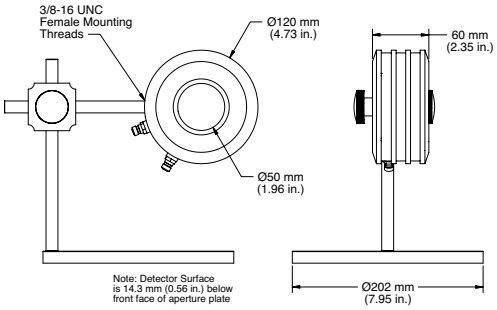

PowerMax-USB/RS Sensors

300 mW to 5 kW

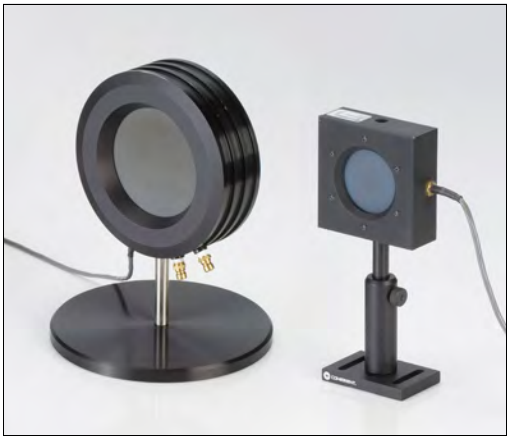

PM5K-100 and PM150-50XC

Features

- **Large 50 mm and 100 mm apertures**
- **Water-cooled**

Tap or distilled cooling water is recommended with these sensors - DI water and most common additives will not have any adverse effects. A technical note is available with more details. Flow rates are power dependent and range from 0.5 to 4 gallons per minute; pressure depends upon flow rate and ranges from 3 to 40 PSI (visit product pages at www.Coherent.com/LMC for more technical details). See page 56 for RS model power supply accessory.

Device Specifications

ISO/IEC 17025:2005

AC-1630

Model	PM150-50XC	PM1KX-100	PM5K-100
Wavelength Range (µm)	0.15 to 1	0.15 to 1	0.25 to 10.6
Power Range	300 mW to 150W	50W to 1000W	100W to 3000W
Noise Equivalent Power (mW)	1	20	20
Maximum Power Density[1] (kW/cm²)	6	1 to 2.5	1 to 2.5
Maximum Energy Density (mJ/cm²)	600	600	600
Response Time (sec.)(0% to 95%)			
Speed-up On	3	4	4
Speed-up Off	12	6	12
Detector Coating	UV	UV	Broadband
Detector Element		Thermopile	
Detector Diameter (mm)	50	100	100
Calibration Uncertainty (%)(k=2)		±3	±5
Power Linearity (%)		±1	
Spectral Compensation Accuracy (%)		±1.5	
Calibration Wavelength (nm)	514	1070	1070
Cooling Method		Water	
Cable Type		USB and RS	
Cable Length (m)		2.5 (USB)/0.3 (RS)	
Part Number[2]	1305568 (RS)	1214871 (RS)	1235755 (USB)

[1] The damage resistance of the coating is dependent upon the beam size and profile, the average power level, and the water flow rate. Contact Coherent or your local representative for details related to your application.

[2] Software, water fittings and post stand included with kW sensors.

PM150-50XC

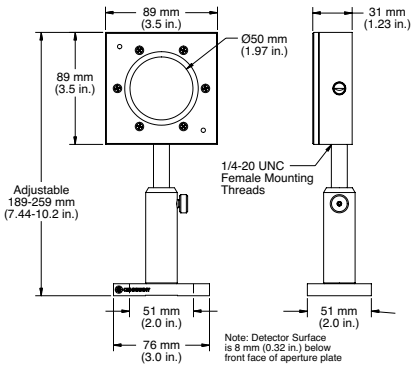

PM1KX-100/PM5K-100

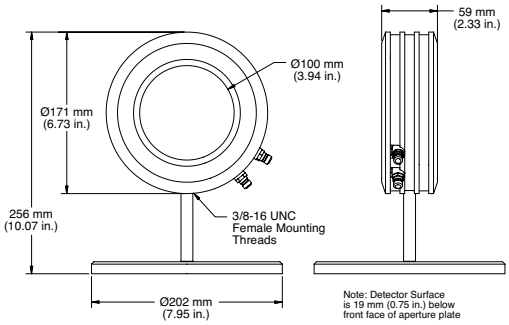

PowerMax-USB/RS Sensor Accessories

Fiber-Optic Connector Adapters

SMA and FC Adapters

The following fiber-optic adapters can be mounted directly onto the 3/4-32 threads on the front of LM-3 and LM-10 sensors. These fiber adapters can also be used with our 1.035-40M adapter ring to fit on the LM-45, LM-20, and LM-200 sensors.

Part Number	Description	Sensors
1098589	SMA-Type Connector	LM-3, LM-10
1098339	FC/PC-Type Connector	LM-3, LM-10
33-9432-000	1.035-40M Adapter Ring	LM-45, LM-20, LM-100, LM-200

SMA and FC Adapters

The following fiber adapters can be mounted onto the front of the PS10 sensor in place of the removable light tube.

Part Number	Description	Sensors
0012-3860	PS-SMA-Type Connector	PS10
0012-3863	PS-FC-Type Connector	PS10

PowerMax-RS Sensor Power Supply

Part Number	Description
1105557	5V External Power Supply

PowerMax-USB Wand UV/VIS Adapters

Part Number	Description
1211488	Collimating Adapter
1211489	FC Fiber Adapter
1220619	FC-APC Fiber Adapter
1220621	SMA Fiber Adapter
1220622	7 mm Aperture

Power Sensors Specifications

Summary of Specifications

Part Number	Description	Wavelength Range (µm)	Power Min.	Power Max.	Power Resolution	Long-Pulse Energy Range (J)	Detector Diameter (mm)	Detector Coating	Detector Type	Calibration Wavelength (nm)	Calibration Uncertainty (±%) (k=2)	Connector
High-Sensitivity Semiconductor Sensors (to 50 mW)												
1098401	OP-2 UV	0.25 to 0.4	10 nW	30 mW	1 nW	–	6.0	–	Silicon	–	8	OP DB-25
1098313	OP-2 VIS	0.4 to 1.1	10 nW	30 mW	1 nW	–	7.9	–	Silicon	–	5	OP DB-25
1098416	OP-2 IR	0.8 to 1.8	10 nW	10 mW	1 nW	–	5.0	–	Germanium	–	4.5	OP DB-25
1098390	LM-2 UV	0.25 to 0.4	10 nW	30 mW	1 nW	–	6.0	–	Silicon	–	8	LM DB-25
1098298	LM-2 VIS	0.4 to 1.064	10 nW	30 mW	1 nW	–	7.9	–	Silicon	–	5	LM DB-25
1098342	LM-2 IR	0.8 to 1.55	10 nW	10 mW	1 nW	–	5.0	–	Germanium	–	4.5	LM DB-25
High-Sensitivity Thermopile Sensors (to 2W)												
1098350	PS10	0.19 to 11.0	100 µW	1W	10 µW	0.001 to 1	10	Black	–	514	1	PM DB-25
1098400	PS10Q	0.3 to 2.0	100 µW	1W	10 µW	0.001 to 1	10	Black	–	514	1	PM DB-25
1098413	PS19	0.19 to 11.0	100 µW	1W	10 µW	0.001 to 1	19	Black	–	514	1	PM DB-25
1098341	PS19Q	0.3 to 2.0	100 µW	1W	10 µW	0.001 to 1	19	Black	–	514	1	PM DB-25
1098336	PM3	0.19 to 11.0	500 µW	2W	50 µW	–	19	Black	–	514	1	PM DB-25
1098419	PM3Q	0.3 to 2.0	500 µW	2W	50 µW	–	10	Black	–	514	1	PM DB-25
Air-Cooled Thermopile Sensors (to 150W)												
1098329	PM2	0.25 to 11.0	10 mW	2W	1 mW	0.5 to 2	19	Broadband	–	514	1	PM DB-25
1098457	PM2X	0.15 to 1.0	10 mW	2W	1 mW	0.5 to 2	19	UV	–	514	1	PM DB-25
1097901	PM10	0.25 to 11.0	10 mW	10W	1 mW	0.5 to 10	19	Broadband	–	514	1	PM DB-25
1098423	PM10X	0.15 to 1.0	10 mW	10W	1 mW	0.5 to 10	19	UV	–	514	1	PM DB-25
1098314	PM30	0.25 to 11.0	100 mW	30W	10 mW	0.5 to 50	19	Broadband	–	514	1	PM DB-25
1098498	PM30X	0.15 to 1.0	100 mW	30W	10 mW	0.5 to 50	19	UV	–	514	1	PM DB-25
1098483	PM100-19C	0.25 to 11.0	300 mW	100W	30 mW	1 to 100	19	Broadband	–	514	1	PM DB-25
1098407	PM150	0.25 to 11.0	300 mW	150W	30 mW	1 to 150	19	Broadband	–	514	1	PM DB-25
1098398	PM150-50	0.25 to 11.0	300 mW	150W	30 mW	1 to 150	50	Broadband	–	514	1	PM DB-25
1098455	PM150X	0.15 to 1.0	300 mW	150W	30 mW	1 to 150	50	UV	–	514	1	PM DB-25
Water-Cooled Thermopile Sensors (to 300W)												
1098397	PM10-19C	0.25 to 11.0	10 mW	10W	1 mW	0.5 to 10	19	Broadband	–	514	1	PM DB-25
1098444	PM150-19C	0.25 to 11.0	300 mW	150W	30 mW	1 to 150	19	Broadband	–	514	1	PM DB-25
1098412	PM150-50C	0.25 to 11.0	300 mW	150W	30 mW	1 to 150	50	Broadband	–	514	1	PM DB-25
1098443	PM150-50XC	0.15 to 1.0	300 mW	150W	30 mW	1 to 150	50	UV	–	514	1	PM DB-25
1141474	PM300	0.25 to 11.0	1W	300W	0.1W	–	19	Broadband	–	514	1	PM DB-25
Fan-Cooled Thermopile Sensors (to 300W)												
1098480	PM200F-19	0.25 to 11.0	1W	200W	100 mW	1 to 200	19	Broadband	–	514	1	PM DB-25
1098472	PM200F-50	0.25 to 11.0	1W	200W	100 mW	1 to 200	50	Broadband	–	514	1	PM DB-25
1113493	PM200F-50X	0.15 to 1.0	1W	200W	100 mW	1 to 200	50	UV	–	514	1	PM DB-25
1098509	PM300F-19	0.25 to 11.0	1W	300W	100 mW	1 to 300	19	Broadband	–	514	1	PM DB-25
1098417	PM300F-50	0.25 to 11.0	1W	300W	100 mW	1 to 300	50	Broadband	–	514	1	PM DB-25
1098481	PM300F-50X	0.15 to 1.0	1W	300W	100 mW	1 to 300	50	UV	–	514	1	PM DB-25

Power Sensors Specifications

Summary of Specifications

POWER & ENERGY
Power & Energy Meters
PowerMax-Pro Sensors
USB/RS Power Sensors
DB-25 Power Sensors
USB/RS Energy Sensors
DB-25 Energy Sensors
Custom & OEM
BEAM DIAGNOSTICS
CALIBRATION & SERVICE
Laser Cross-Reference Index
Model Name Index

Part Number	Description	Wavelength Range (µm)	Power Min.	Power Max.	Power Resolution	Long-Pulse Energy Range (J)	Detector Diameter (mm)	Detector Coating	Calibration Wavelength (nm)	Calibration Uncertainty (±%)(k=2)	Connector
High Power Water-Cooled Thermopile Sensors (to 5 kW)											
1098392	PM1K	0.25 to 11.0	100W	1000W	1W	–	50	Broadband	1064	3	PM DB-25
1098462	PM3K	0.25 to 11.0	100W	3000W	1W	–	50	Broadband	1064	3	PM DB-25
1098454	PM5K	0.25 to 11.0	100W	5000W	1W	–	50	Broadband	1064	3	PM DB-25
Large Area High Power Water-Cooled Thermopile Sensors (to 5 kW)											
1098490	PM1K-100	0.25 to 11.0	100W	1000W	1W	–	100	Broadband	1064	3	PM DB-25
1098506	PM3K-100	0.25 to 11.0	100W	3000W	1W	–	100	Broadband	1064	3	PM DB-25
1098461	PM5K-100	0.25 to 11.0	100W	5000W	1W	–	100	Broadband	1064	3	PM DB-25
1098505	PM5K-200	0.25 to 11.0	100W	5000W	1W	–	200	Broadband	1064	3	PM DB-25
Position-Sensing Air-Cooled Thermopile Sensors (to 200W)											
1098328	LM-3	0.25 to 10.6	10 mW	3W	1 mW	0.5 to 10	19	HTD	10600	2	LM DB-25
1098304	LM-10	0.25 to 10.6	10 mW	10W	1 mW	0.5 to 10	16	HTD	10600	2	LM DB-25
1098456	LM-20	0.25 to 10.6	100 mW	20W	10 mW	0.5 to 10	19	HTD	10600	2	LM DB-25
1098320	LM-45	0.25 to 10.6	100 mW	45W	10 mW	0.5 to 10	19	HTD	10600	2	LM DB-25
1098346	LM-100	0.25 to 10.6	100 mW	100W	10 mW	0.5 to 10	19	HTD	10600	2	LM DB-25
1098394	LM-150 FS	0.25 to 10.6	100 mW	150W	10 mW	0.5 to 10	19	HTD	10600	5	LM DB-25
1098452	LM-150 LS	0.25 to 10.6	100 mW	150W	10 mW	0.5 to 10	19	HTD	10600	5	LM DB-25
1098450	LM-200 220V	0.25 to 10.6	100 mW	200W	10 mW	0.5 to 100	19	HTD	10600	5	LM DB-25
1098440	LM-200 110V	0.25 to 10.6	100 mW	200W	10 mW	0.5 to 100	19	HTD	10600	5	LM DB-25
Position-Sensing Water-Cooled Thermopile Sensors (to 5 kW)											
1098409	LM-1000	0.25 to 10.6	100W	1000W	1W	–	38	Broadband	10600	5	LM DB-25
1098437	LM-2500	0.25 to 10.6	100W	2500W	1W	–	55	Broadband	10600	5	LM DB-25
1098421	LM-5000	0.25 to 10.6	100W	5000W	1W	–	55	Broadband	10600	5	LM DB-25
High Peak Power Thermopile Sensors (to 30W)											
1098338	PM10V1	0.25 to 3.0	10 mW	10W	1 mW	–	19	Volume Absorber	514	1	PM DB-25
1098429	PM30V1	0.25 to 3.0	100 mW	30W	10 mW	–	19	Volume Absorber	514	1	PM DB-25
Off-the-Shelf OEM Power Sensors (to 1 kW)											
1098334	PM10-19A	0.19 to 11.0	10 mW	10W	1 mW	–	19	Broadband	514	1	4-pin connector
1098343	PM10-19B	0.19 to 11.0	10 mW	10W	1 mW	–	19	Broadband	514	1	BNC-terminated
1098418	PM150-19A	0.19 to 11.0	300 mW	150W	30 mW	–	19	Broadband	514	1	4-pin connector
1098321	PM150-19B	0.19 to 11.0	300 mW	150W	30 mW	–	19	Broadband	514	1	BNC-terminated
1098510	PM150-50A	0.19 to 11.0	300 mW	150W	30 mW	–	50	Broadband	514	1	4-pin connector
1098415	PM150-50B	0.19 to 11.0	300 mW	150W	30 mW	–	50	Broadband	514	1	BNC-terminated
1098441	PM150-50XB	0.15 to 1.0	300 mW	150W	30 mW	–	50	UV	514	1	BNC-terminated
1098333	PM1K-36B	0.19 to 11.0	100W	1000W	1W	–	36	Broadband	1064	3	BNC-terminated
1098427	BeamFinder	0.25 to 10.6	100W	1000W	1W	–	35	Broadband	10600	5	LM DB-25

Beam Position Sensing Thermopile Sensors

10 mW to 45W

LM-3, LM-10 and LM-45

Features

- Spectrally flat from 0.19 µm to 11 µm
- 10 mW to 100 mW resolution
- 16 mm to 19 mm apertures
- FC and SMA fiber connectors available (see page 56)

Use with LabMax (see pages 10-13)

These unique thermopiles incorporate a quadrant thermopile disk that enables them to sense the position of the beam on the detector surface. This information is displayed by meters such as LabMax. All Coherent products which incorporate this position sensing technology are identified with the logo shown on the right.

Device Specifications

ISO/IEC 17025:2005

AC-1630

Model	LM-3	LM-10	LM-45
Wavelength Range (µm)		0.25 to 10.6	
Power Range	10 mW to 3W	10 mW to 10W	100 mW to 25W
Maximum Intermittent Power (W)(<5 min.)	10	12	45
Long-Pulse Joules Range (J)		0.5 to 10	
Resolution (mW)	1		10
Maximum Power Density (kW/cm²)		6	
Maximum Energy Density (mJ/cm²)		600, 1064 nm, 10 ns	
Detector Coating		HTD	
Detector Diameter (mm)	19	16	19
Calibration Uncertainty (%)(k=2)		±2	
Calibration Wavelength (µm)		10.6	
Cooling Method		Air-cooled	
Cable Type		LM DB-25	
Cable Length (m)		1.8	
Part Number	1098328**	1098304**	1098320**

**C24 Quick Ship program: eligible for next business day shipment.

LM-3

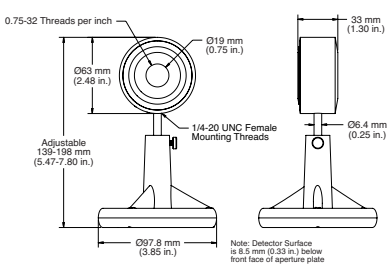

LM-10

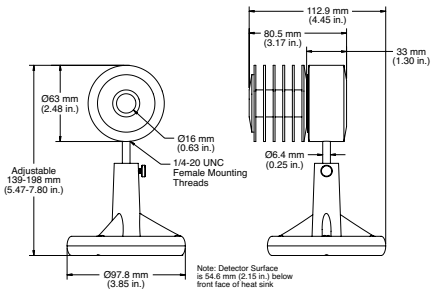

LM-45

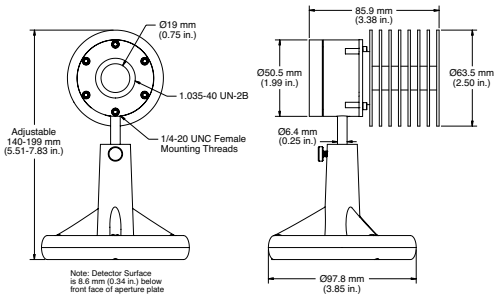

Beam Position Sensing Thermopile Sensors

100 mW to 200W

POWER & ENERGY
Power & Energy Meters
PowerMax-Pro Sensors
USB/RS Power Sensors
DB-25 Power Sensors
USB/RS Energy Sensors
DB-25 Energy Sensors
Custom & OEM
BEAM DIAGNOSTICS
CALIBRATION & SERVICE
Laser Cross-Reference Index
Model Name Index

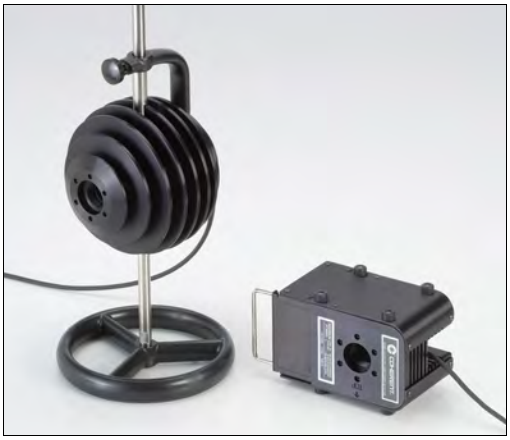

LM-100 and LM-200

Features

- Spectrally flat from 0.19 µm to 11 µm
- 10 mW resolution
- 19 mm apertures
- FC and SMA fiber connectors available (see page 77)

Use with LabMax (see pages 10-13)

The LM-100 sensor is convectively-cooled for powers up to 100W. The LM-200 sensor is fan-cooled and is available in 110 VAC and 220 VAC configurations.

Device Specifications

ISO/IEC 17025:2005

Model	LM-100	LM-200
Wavelength Range (µm)	0.25 to 10.6	
Power Range	100 mW to 100W	100 mW to 200W
Long-Pulse Joules Range (J)	0.5 to 10	
Resolution (mW)	10	
Maximum Power Densit (kW/cm²)	6	
Maximum Energy Density (mJ/cm²)	600, 1064 nm, 10 ns	
Detector Coating	HTD	
Detector Diameter (mm)	19	
Calibration Uncertainty (%)(k=2)	±2	±5
Calibration Wavelength (µm)	10.6	
Cooling Method	Air-cooled	Fan-cooled
Cable Type	LM DB-25	
Cable Length (m)	1.8	
Part Number	1098346	1098440 (110VAC) 1098450 (220 VAC)

LM-100

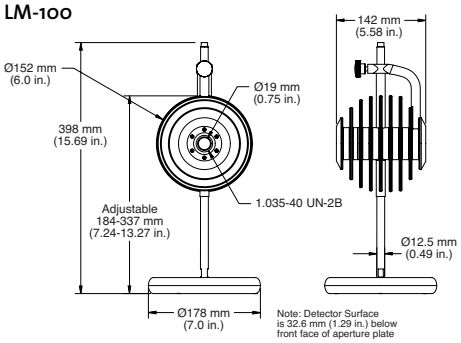

LM-200

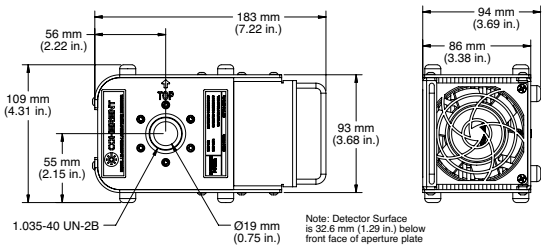

Beam Position Sensing Thermopile Sensors

100 mW to 150W

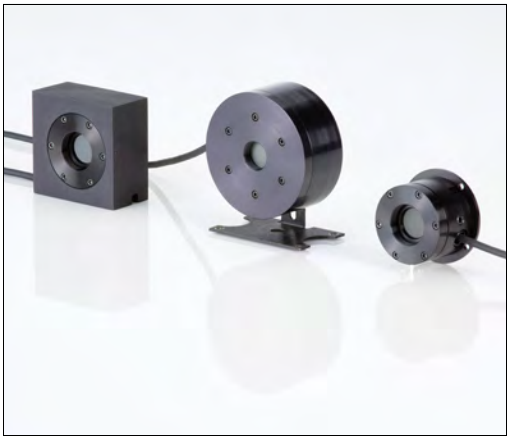

LM-150LS, LM-150FS and LM-20

Features

- Spectrally flat from 0.19 µm to 11 µm
- 10 mW to 100 mW resolution
- 19 mm apertures
- FC and SMA fiber connectors available (see page 77)

Use with LabMax (see pages 10-13)

The LM-20 is designed for embedded use and must be mounted on a heat sink. The LM-150 FS and LS sensors are designed for intermittent operation.

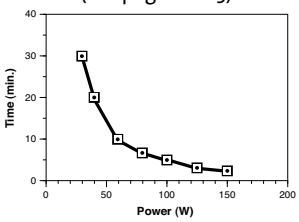

LM-150 FS and LS Power Duration

Device Specifications

ISO/IEC 17025:2005

AC-1630

Model	LM-20	LM-150 LS	LM-150 FS
Wavelength Range (µm)		0.25 to 10.6	
Power Range	100 mW to 20W	100 mW to 150W	100 mW to 150W
Long-Pulse Joules Range (J)		0.5 to 10	
Resolution (mW)		10	
Maximum Power Density (kW/cm²)		6	
Maximum. Energy Density (mJ/cm²)		60, 1064 nm, 10 ns	
Detector Coating		HTD	
Detector Diameter (mm)		19	
Calibration Uncertainty (%)(k=2)	±2	±5	±5
Calibration Wavelength (µm)		10.6	
Cooling Method	Conductive-cooled	Air-cooled	
Cable Type		LM DB-25	
Cable Length (m)		1.8	
Part Number	1098456	1098452	1098394

LM-20

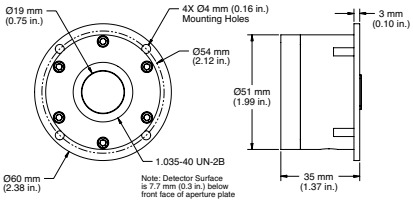

LM-150 LS

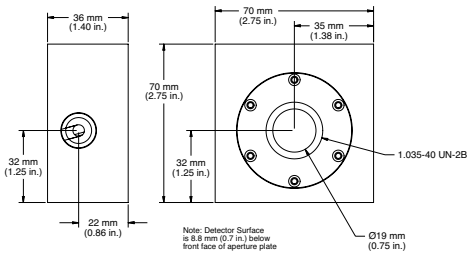

LM-150 FS

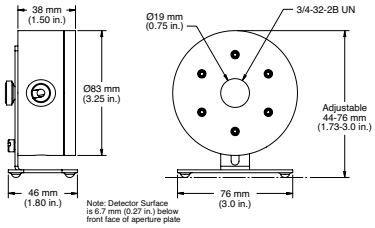

Beam Position Sensing Thermopile Sensors

100W to 5 kW

POWER & ENERGY
Power & Energy Meters
PowerMax-Pro Sensors
USB/RS Power Sensors
DB-25 Power Sensors
USB/RS Energy Sensors
DB-25 Energy Sensors
Custom & OEM
BEAM DIAGNOSTICS
CALIBRATION & SERVICE
Laser Cross-Reference Index
Model Name Index

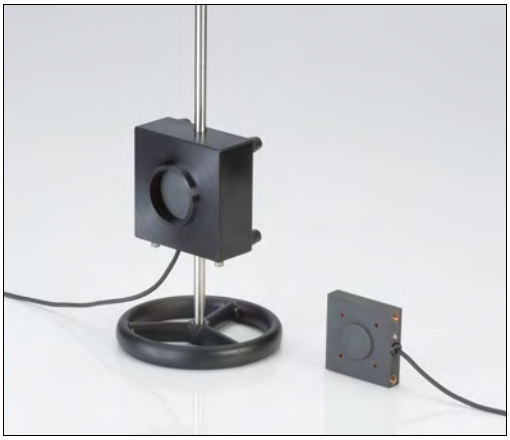

LM-5000 and BeamFinder

Features

- Water-cooled
- Spectrally flat from 0.19 µm to 11 µm
- 1W resolution
- 35 mm to 55 mm apertures

Use with LabMax
(see pages 10-13)

These kilowatt thermopile sensors are water-cooled for measuring output over 100W and are excellent for use with CO_2 and Nd:YAG lasers.Tap or distilled cooling water is recommended with these sensors - DI water and most common additives will not have any adverse effects. A technical note is available with more details. Flow rates are power dependent and range from 0.5 to 4 gallons per minute; pressure depends upon flow rate and ranges from 3 to 40 PSI (visit product pages at www.Coherent.com/LMC for more technical details). Water fittings are included.

Device Specifications

ISO/IEC 17025:2005

AC-1630

Model	BeamFinder	LM-1000	LM-2500	LM-5000
Wavelength Range (µm)	0.3 to 10.6	0.25 to 10.6		
Power Range (W)	100 to 1000		100 to 2500	100 to 5000
Resolution (W)	1			
Maximum Power Density[1] (kW/cm²)	1 to 2.5			
Maximum Energy Density (mJ/cm²)	600, 1064 nm, 10 ns			
Detector Coating	Broadband			
Active Area Diameter (mm)	35	38	56	
Calibration Uncertainty (%)(k=2)	±5			
Calibration Wavelength (µm)	10.6			
Cooling Method	Water-cooled			
Cable Type	LM DB-25			
Cable Length (m)	6			
Part Number	1098427	1098409	1098437	1098421

[1] The damage resistance of the coating is dependent upon the beam size and profile, the average power level, and the water flow rate. Contact Coherent or your local representative for details related to your application.

BeamFinder

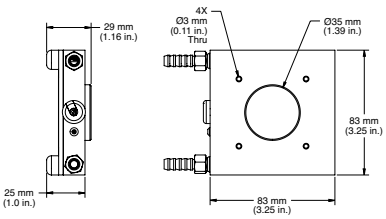

LM-1000

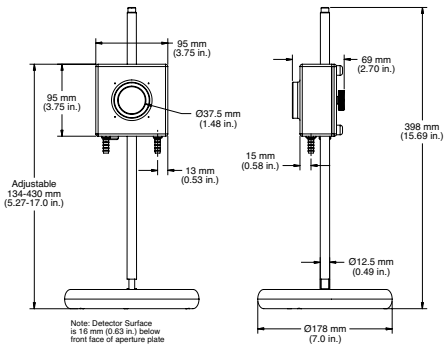

LM-2500/LM-5000

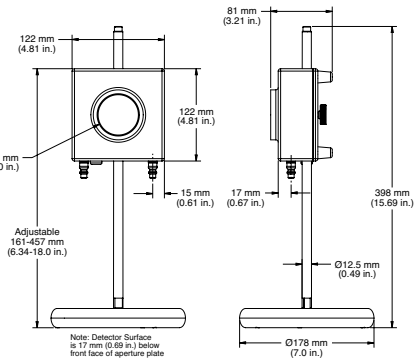

High-Sensitivity Optical Power Sensors

10 nW to 50 mW, CW

OP-2/LM-2

Features

- Si, Ge photodiodes
- Spectral range: 250 nm to 1800 nm
- Fiber-optic connector (optional, see page 77)
- 1000:1 attenuator for measurement to 5W (optional, see page 76)

These high-sensitivity semiconductor sensors are ideal for CW laser measurements in the nW to low mW level. They typically saturate in the 10 to 50 mW level, depending upon the model. For linear operation up to a maximum of 5 Watts, an optional 1000:1 attenuator is used. Light shield is removable.

OP-2 models are compatible with FieldMate, FieldMaxII and LabMax meters. LM-2 models are directly compatible with LabMax meters.

Device Specifications

ISO/IEC 17025:2005

Model	OP-2/LM-2 UV	OP-2/LM-2 VIS	OP-2/LM-2 IR
Detector Material	Silicon		Germanium
Wavelength Range (µm)	0.25 to 0.4	0.4 to 1.1/0.4 to 1.064[1]	0.8 to 1.80/0.8 to 1.5[1]
Power Range	10 nW to 30 mW	10 nW to 30 mW[2]	10 nW to 10 mW
Resolution (nW)	1		
Maximum Power Density (W/cm²)	0.3	1.0	0.5
Active Area Diameter (mm)	6	7.9	5
Calibration Uncertainty (%)(k=2)	±4.0	±12.0/±5.0[3]	±4.5/±9.0
Calibration Wavelength (nm)	200 to 400	440 to 445/450 to 1100	800 to 1700/1700 to 1800
Cooling Method	Air-cooled		
Connector Type	OP DB-25/LM DB-25		
Cable Length (m)	1.8		
Part Number			
OP-2	1098401	1098313**	1098416**
LM-2	1098390	1098298**	1098342

[1] OP-2 IR and LM-2 IR have different spectral ranges.
[2] Power range is wavelength dependent. See chart below.
[3] ±12% uncertainty is for the 440 nm to 445 nm spectral range.
±5% uncertainty is for the 450 nm to 1100 nm spectral range.
** C24 Quick Ship program: eligible for next business day shipment.

OP-2 UV/OP-2 VIS/OP-2 IR
LM-2 UV/LM-2 VIS/LM-2 IR

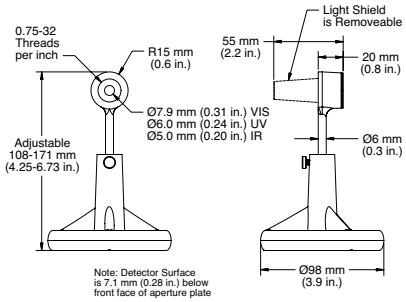

Measurable Power vs. Wavelength
OP-2 VIS and LM-2 VIS

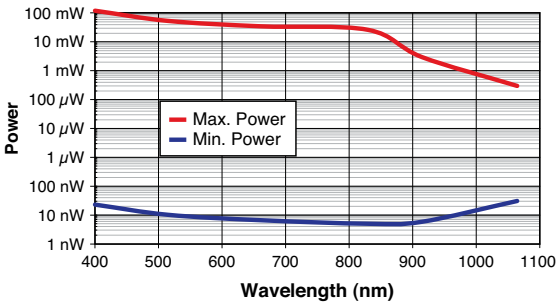

Accessories

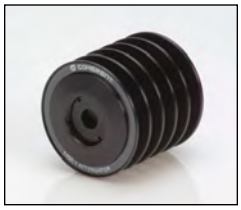

1000:1 Attenuator (see page 76)

Fiber-Optic Connector Adapters (see page 77)

High-Sensitivity Thermopile Power Sensors

100 µW to 2W

POWER & ENERGY
Power & Energy Meters
PowerMax-Pro Sensors
USB/RS Power Sensors
DB-25 Power Sensors
USB/RS Energy Sensors
DB-25 Energy Sensors
Custom & OEM
BEAM DIAGNOSTICS
CALIBRATION & SERVICE
Laser Cross-Reference Index
Model Name Index

PS19Q, PS19, PS10 and PM3

Features

- **Thermally stabilized designs**
- **Spectrally flat from 0.3 µm to 11 µm**
- **10 µW resolution**
- **Fiber-optic connectors (optional, see page 77)**

The PS10 and PS19 model sensors are thermally stabilized, amplified thermopile power sensors with a broad spectral response, high sensitivity, and a large active area. These sensors are ideal for measuring laser diodes, HeNe and HeCd lasers, and small ion lasers. The PS10 model includes a light tube mounted to the front of the housing, which minimizes the effects of background radiation. The light tube can be removed and replaced by FC or SMA fiber connectors (see Accessories - page 77). Where optimum stability is required, specify the PS10Q or PS19Q, which include a wedged quartz window for applications from 0.3 to 2.0 µm. The quartz window more effectively eliminates thermal background radiation and the effects of air currents.

Device Specifications

ISO/IEC 17025:2005

AC-1630

Model	PS10[2]	PS10Q	PS19	PS19Q	PM3[2]	PM3Q
Wavelength Range (µm)	0.19[3] to 11	0.3 to 2	0.19[3] to 11	0.3 to 2	0.19[3] to 11	0.3 to 2
Power Range	100 µW to 1W				500 µW to 2W	
Resolution (µW)	10				50	
Maximum Intermittent Power (W)(<5 min.)	3					
MaximumThermal Drift[1]	±40 µW	±20 µW	±400 µW	±20 µW	±1 mW	±500 µW
Maximum Avg. Power Density (kW/cm²)	0.5					
Maximum Pulse Energy Density (mJ/cm²)	50, 10 ns, 1064 nm					
Response Time (sec.)	2					
Detector Coating	Black					
Quartz Filter Window	No	Yes	No	Yes	No	Yes
Active Area Diameter (mm)	10		19		19	10
Calibration Uncertainty (%)(k=2)	±1					
Calibration Wavelength (nm)	514					
Cooling Method	Air-cooled					
Cable Type	PM DB-25					
Cable Length (m)	2					
Part Number	1098350**	1098400	1098413**	1098341**	1098336	1098419

[1] Power stability over 30 minutes in a typical lab environment.
[2] Light tube supplied with PS10 and PM3 models only.
[3] 190 nm to 300 nm operation restricted to <100 mW average power and <250W/cm² power density.
** C24 Quick Ship program: eligible for next business day shipment.

PS10/PS10Q

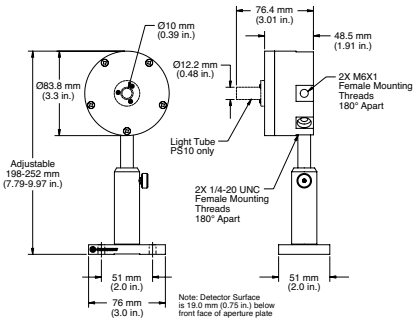

PS19/PS19Q

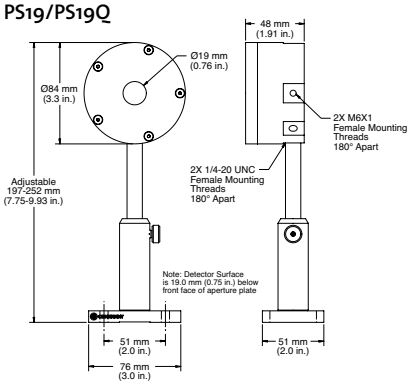

PM3/PM3Q

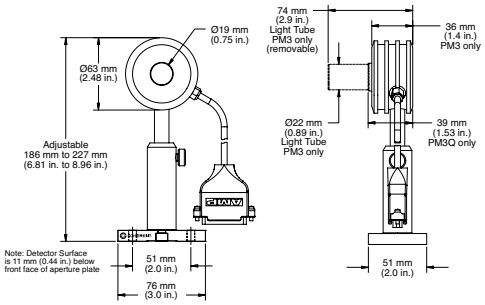

Air-Cooled Thermopile Sensors

10 mW to 30W

PM2, PM10 and PM30

Features

- Convective air-cooled
- Spectrally flat from 0.19 µm to 11 µm
- 1 to 10 mW resolution
- 19 mm aperture

These thermopile sensors are used to measure CW and pulsed lasers from 10 mW up to 30W average power output. These sensors are able to dissipate heat via convection cooling, which makes them convenient to use.

Device Specifications

ISO/IEC 17025:2005

AC-1630

Model	PM2	PM10	PM30
Wavelength Range (µm)	0.25 to 11		
Power Range	10 mW to 2W	10 mW to 10W	100 mW to 30W
Long-Pulse Joules Range (J)	0.5 to 2	0.5 to 10	0.5 to 50
Maximum Intermittent Power (<5 min.)(W)	5	30	50
Resolution (mW)	1		10
Maximum Power Density (kW/cm²)	6		
Maximum Energy Density (mJ/cm²)	600, 1064 nm, 10 ns		
Response Time (sec.)	2		
Detector Coating	Broadband		
Active Area Diameter (mm)	19		
Calibration Uncertainty (%)(k=2)	±1		
Calibration Wavelength (nm)	514		
Cooling Method	Air-cooled		
Cable Type	PM DB-25		
Cable Length (m)	2		
Part Number	1098329**	1097901**	1098314**

**C24 Quick Ship program: eligible for next business day shipment.

PM2

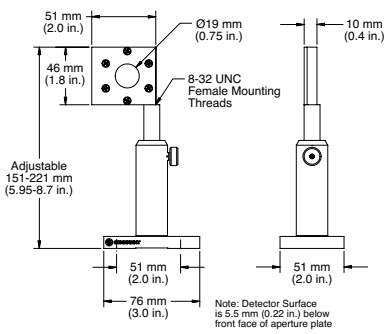

PM10

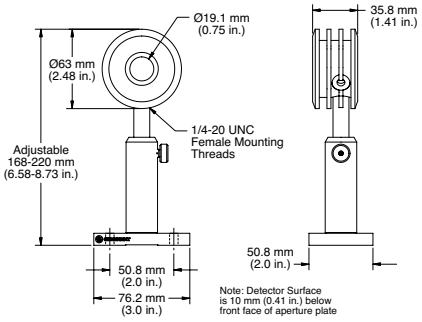

PM30

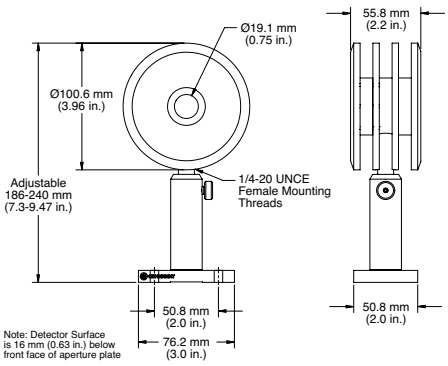

Air-Cooled Thermopile Sensors

300 mW to 150W

POWER & ENERGY
Power & Energy Meters
PowerMax-Pro Sensors
USB/RS Power Sensors
DB-25 Power Sensors
USB/RS Energy Sensors
DB-25 Energy Sensors
Custom & OEM
BEAM DIAGNOSTICS
CALIBRATION & SERVICE
Laser Cross-Reference Index
Model Name Index

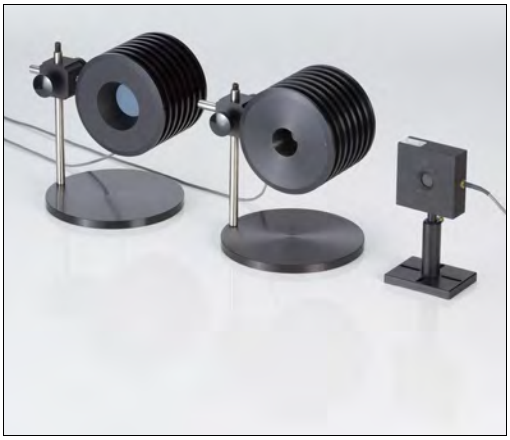

PM150-50, PM150 and PM100-19C

Features

- Convective air-cooled
- Spectrally flat from 0.19 µm to 11 µm
- 30 mW resolution
- 19 mm and 50 mm apertures

Device Specifications

ISO/IEC 17025:2005

AC-1630

Model	PM100-19C[1]	PM150	PM150-50
Wavelength Range (µm)	0.25 to 11		
Power Range	300 mW to 100W	300 mW to 150W	
Long-Pulse Joules Range (J)	1 to 100	1 to 150	
Maximum Intermittent Power (<5 min.)(W)	100	300	
Resolution (mW)	30		
Maximum Power Density (kW/cm²)	6		
Maximum Energy Density (mJ/cm²)	600, 1064 nm, 10 ns		
Response Time (sec.)	2		5
Detector Coating	Broadband		
Active Area Diameter (mm)	19		50
Calibration Uncertainty (%)(k=2)	±1		
Calibration Wavelength (nm)	514		
Cooling Method	Air-cooled		
Cable Type	PM DB-25		
Cable Length (m)	2		
Part Number	1098483	1098407	1098398

[1] This sensor is designed for intermittent use only.

PM100-19C

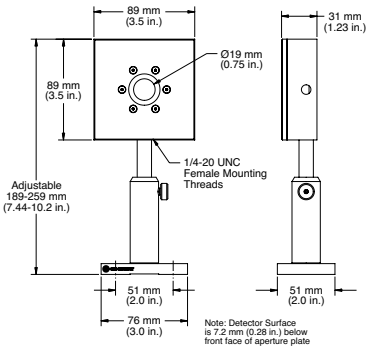

PM150

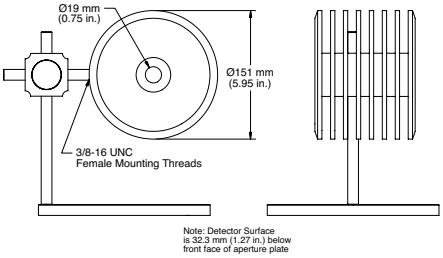

PM150-50

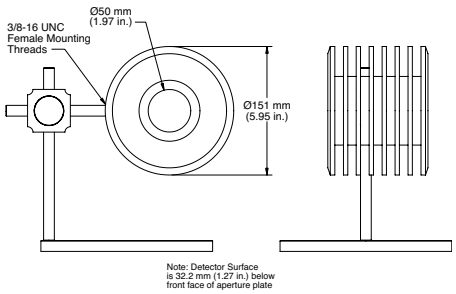

Water-Cooled Thermopile Sensors

10 mW to 300W

PM300, PM150-50C and PM150-19C

Features

- **Water-cooled; but can be used air-cooled for short periods of time**
- **Spectrally flat from 0.19 µm to 11 µm**
- **1 mW to 100 mW resolution**
- **19 mm and 50 mm apertures**

These compact sensors are ideal in tight spaces, but must be water-cooled in order to achieve their full power specification during continuous operation. They can also be mounted to a heat sink or used standalone for intermittent use. Tap or distilled cooling water is recommended with these sensors - DI water and most common additives will not have any adverse effects. A technical note is available with more details. Flow rates are power dependent and range from 0.5 to 4 gallons per minute; pressure depends upon flow rate and ranges from 3 to 40 PSI (visit product pages at www.Coherent.com/LMC for more technical details). Water fittings are included. OEM versions of these sensors with passive and amplified outputs can be found on pages 105 and 106.

Device Specifications

ISO/IEC 17025:2005

AC-1630

Model	PM10-19C	PM150-19C	PM150-50C	PM300
Wavelength Range (µm)	0.25 to 11			
Power Range (water-cooled)	10 mW to 10W	300 mW to 150W		1 W to 300W
Maximum Intermittent Power (<5 min.)(W)	5[1]	20[1]	80[1]	450[2]
Long-Pulse Joules Range (J)	0.5 to 10	1 to 150		–
Resolution (mW)	1	30		100
MaximumPower Density (kW/cm²)	6			
Maximum Energy Density (mJ/cm²)	600, 1064 nm, 10 ns			
Response Time (sec.)	2		5	
Detector Coating	Broadband			
Active Area Diameter (mm)	19		50	19
Calibration Uncertainty (%)(k=2)	±1			
Calibration Wavelength (nm)	514			
Cooling Method	Water-cooled			
Cable Type	PM DB-25			
Cable Length (m)	2			
Part Number	1098397	1098444	1098412**	1141474

[1] This intermittent power rating is for when the sensor is used without water-cooling.
[2] This intermittent power rating is for when the sensor is used with water-cooling.
** C24 Quick Ship program: eligible for next business day shipment.

PM10-19C/PM150-19C

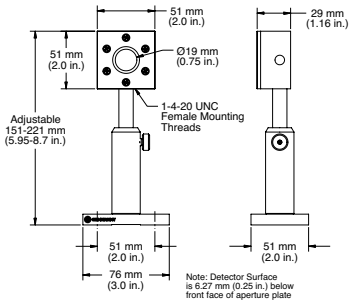

PM150-50C

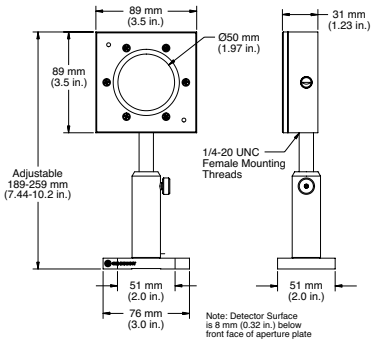

PM300

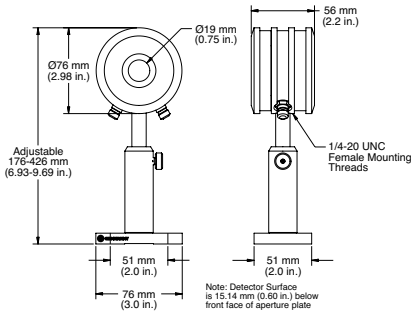

Fan-Cooled Thermopile Sensors

1W to 300W

POWER & ENERGY
Power & Energy Meters
PowerMax-Pro Sensors
USB/RS Power Sensors
DB-25 Power Sensors
USB/RS Energy Sensors
DB-25 Energy Sensors
Custom & OEM
BEAM DIAGNOSTICS
CALIBRATION & SERVICE
Laser Cross-Reference Index
Model Name Index

PM200F-50 and PM300F-50

Features

- Fan-cooled
- Spectrally flat from 0.19 µm to 11 µm
- 100 mW resolution
- 19 mm and 50 mm apertures

Fan-cooled sensors are an excellent choice for measuring high power lasers when water-cooling is not possible. A compact power supply provides the 12 VDC required to power the fan.

Device Specifications

ISO/IEC 17025:2005

AC-1630

Model	PM200F-19	PM200F-50	PM300F-19	PM300F-50
Wavelength Range (µm)	0.25 to 11			
Power Range (W)	1 to 200		1 to 300	
Long-Pulse Joules Range (J)	1 to 200		1 to 300	
Maximum Intermittent Power (<5 min.)(W)	300		450	
Resolution (mW)	100			
Maximum Power Density (kW/cm²)	6			
Maximum Energy Density (mJ/cm²)	600, 1064 nm, 10 ns			
Response Time (sec.)	2	5	2	5
Detector Coating	Broadband			
Active Area Diameter (mm)	19	50	19	50
Calibration Uncertainty (%)(k=2)	±1			
Calibration Wavelength (nm)	514			
Cooling Method	Fan-cooled			
Cable Type	PM DB-25			
Cable Length (m)	2			
Part Number	1098480	1098472**	1098509**	1098417

**C24 Quick Ship program: eligible for next business day shipment.

PM200F-19/PM200F-50

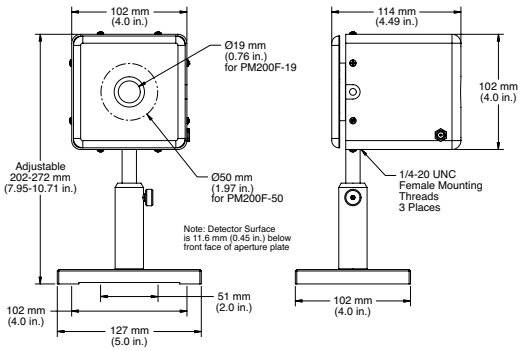

PM300F-19/PM300F-50

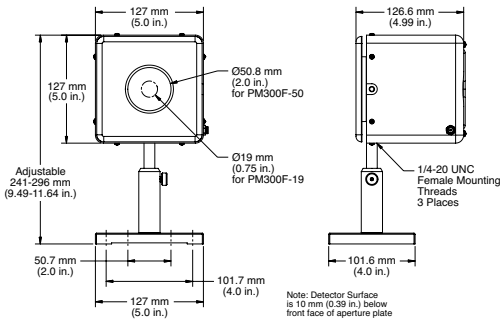

Water-Cooled Thermopile Sensors

100W to 5 kW

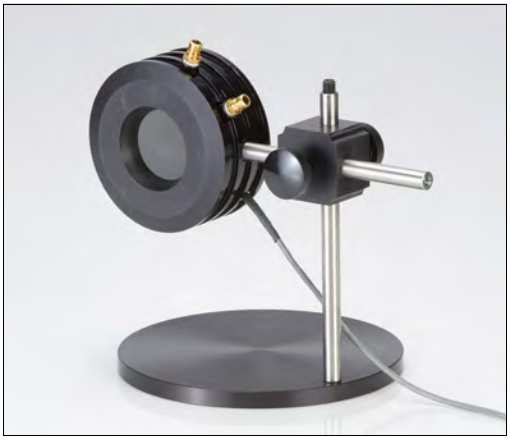

Model PM1K

Features

- Water-cooled
- Spectrally flat from 0.19 µm to 11 µm
- 1W resolution
- 50 mm apertures

These water-cooled sensors are used to measure lasers over 300W average power output. They are excellent choices for measuring CO_2 and Nd:YAG lasers. Larger-area versions are available on the next page.

Tap or distilled cooling water is recommended with these sensors - DI water and most common additives will not have any adverse effects. A technical note is available with more details. Flow rates are power dependent and range from 0.5 to 4 gallons per minute; pressure depends upon flow rate and ranges from 3 to 40 PSI (visit product pages at www.Coherent.com/LMC for more technical details). Water fittings are included.

Device Specifications

ISO/IEC 17025:2005

Model	PM1K	PM3K	PM5K
Wavelength Range (µm)		0.25 to 11	
Power Range (W)	100 to 1000	100 to 3000	100 to 5000
Maximum Intermittent Power (<5 min.)(W)[1]	3000	5000	10000
Resolution (W)		1	
Maximum Power Density[2] (kW/cm²)		1 to 2.5	
Maximum Energy Density (mJ/cm²)		600, 1064 nm, 10 ns	
Response Time (sec.)		30	
Detector Coating		Broadband	
Active Area Diameter (mm)		50	
Calibration Uncertainty (%)(k=2)		±3	
Calibration Wavelength (nm)		1070	
Cooling Method		Water-cooled	
Cable Type		PM DB-25	
Cable Length (m)		2	
Part Number	1098392**	1098462**	1098454**

[1] Intermittent power levels may be sustainable for longer than 5 minutes when used with lasers with large diameter, non-Gaussian beam profiles. Monitor closely for coating damage if used longer than five minutes at higher powers.

[2] The damage resistance of the coating is dependent upon the beam size and profile, the average power level, and the water flow rate. Contact Coherent or your local representative for details related to your application.

** C24 Quick Ship program: eligible for next business day shipment.

PM1K/PM3K/PM5K

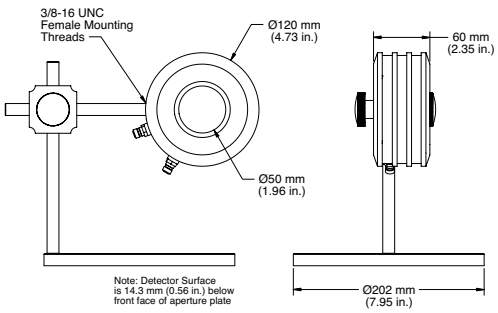

Large Area High Power Water-Cooled Thermopile Sensors

10 mW to 5 kW

POWER & ENERGY
Power & Energy Meters
PowerMax-Pro Sensors
USB/RS Power Sensors
DB-25 Power Sensors
USB/RS Energy Sensors
DB-25 Energy Sensors
Custom & OEM
BEAM DIAGNOSTICS
CALIBRATION & SERVICE
Laser Cross-Reference Index
Model Name Index

PM5K-200 and PM3K-100

Features

- Water-cooled
- 100 mm and 200 mm apertures
- Spectrally flat from 0.19 µm to 11 µm

These large area, water-cooled thermopiles are designed to measure large laser diode stacks and arrays, and other high power divergent sources. Water fittings are included. Tap or distilled cooling water is recommended with these sensors - DI water and most common additives will not have any adverse effects. A technical note is available with more details.

Device Specifications

ISO/IEC 17025:2005

AC-1630

Model	PM1K-100	PM3K-100	PM5K-100	PM5K-200
Wavelength Range (µm)	0.25 to 11			
Power Range (W)	100 to 1000	100 to 3000	100 to 5000	100 to 5000
Maximum. Intermittent Power (<5 min.)(W)	1500	4000	7500	7500
Resolution (W)	1			
Maximum Power Density[1] (kW/cm²)	1 to 2.5			
Maximum Energy Density (mJ/cm²)	600, 1064 nm, 10 ns			
Response Time (sec.)	45			
Detector Coating[1]	Broadband			
Detector Diameter (mm)	100			200
Calibration Uncertainty (%)(k=2)	±3			
Calibration Wavelength (nm)	1070			
Cooling Method	Water-cooled			
Cable Type	PM DB-25			
Cable Length (m)	2			
Part Number	1098490	1098506	1098461	1098505

[1] The damage resistance of the coating is dependent upon the beam size and profile, the average power level, and the water flow rate. Contact Coherent or your local representative for details related to your application.

PM1K-100/PM3K-100/PM5K-100

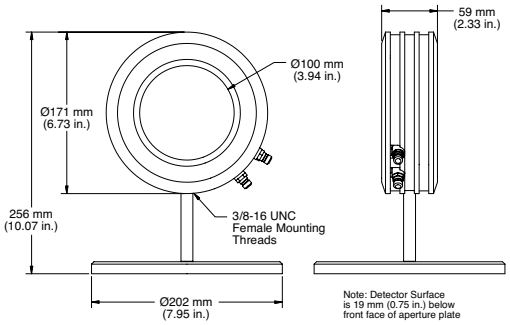

PM5K-200

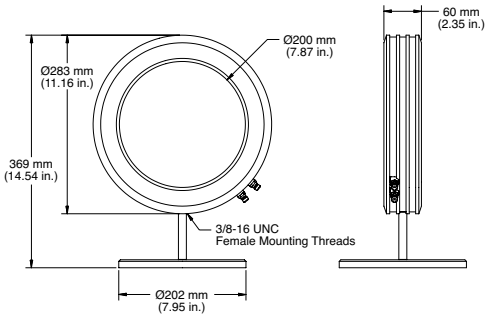

High Peak Power Thermopile Sensors

10 mW to 30W

PM30V1 and PM10V1

Features

- **Volume absorber**
- **2 J/cm² at 1064 nm**

These sensors are designed for use with high peak power, low repetition rate, Q-switched Nd:YAG lasers. A volume-absorbing substrate mounted in front of the detector absorbs the bulk of the laser energy rather than all of the energy striking the front surface of the detector element. This results in a much higher damage threshold, approaching 2 J/cm², at relatively low repetition rates of approximately 10 pps. A removable front aperture allows easy replacement of the volume-absorbing substrate should it be damaged (replacement absorbers may be ordered using part number 0011-8935, PMV1-KIT).

Device Specifications

ISO/IEC 17025:2005

AC-1630

Model	PM10V1	PM30V1
Wavelength Range (µm)	0.25 to 3	
Power Range	10 mW to 10W	100 mW to 30W
Maximum Intermittent Power (<5 min.)(W)	15	50
Resolution (mW)	1	10
Maximum Power Density (W/cm²)	50	
Maximum Energy Density (mJ/cm²)	2, 1064 nm, 10 ns	
Response Time (sec.)	3	
Detector Coating	Volume Absorbing	
Active Area Diameter (mm)	19	
Calibration Uncertainty (%)(k=2)	±1	
Calibration Wavelength (nm)	514	
Cooling Method	Air-cooled	
Cable Type	PM DB-25	
Cable Length (m)	2	
Part Number	1098338	1098429

PM10V1

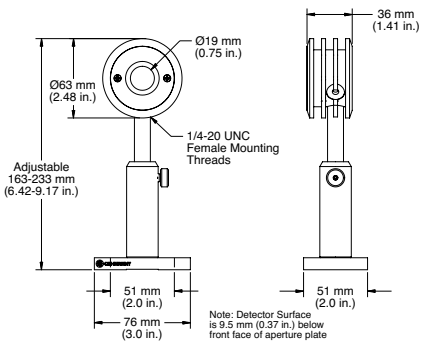

PM30V1

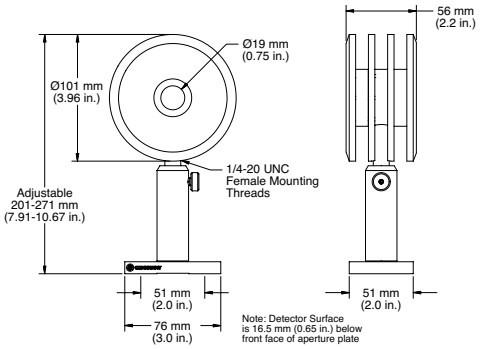

Thermopile Sensors with UV Coating

10 mW to 30W

POWER & ENERGY
Power & Energy Meters
PowerMax-Pro Sensors
USB/RS Power Sensors
DB-25 Power Sensors
USB/RS Energy Sensors
DB-25 Energy Sensors
Custom & OEM
BEAM DIAGNOSTICS
CALIBRATION & SERVICE
Laser Cross-Reference Index
Model Name Index

PM2X, PM10X and PM30X

Features

- UV coating is optimized for DUV
- Spectral range: 0.15 µm to 1 µm
- 1 mW to 10 mW resolution
- 19 mm apertures

The following sensors are similar to models shown on previous pages, except they incorporate a UV coating that is optimized for use at ultraviolet wavelengths. Spectral compensation allows the sensors to be used from 157 nm to 1064 nm.

Device Specifications

ISO/IEC 17025:2005

AC-1630

Model	PM2X	PM10X	PM30X
Wavelength Range (µm)		0.15 to 1	
Power Range	10 mW to 2W	10 mW to 10W	100 mW to 30W
Long-Pulse Joules Range (J)	0.5 to 2	0.5 to 10	0.5 to 50
MaximumIntermittent Power (<5 min.)(W)	5	30	50
Resolution (mW)	1	1	10
Maximum Power Density (kW/cm²)		6	
Maximum Energy Density (mJ/cm²)		600, 1064 nm, 10 ns	
Response Time (sec.)		2	
Detector Coating		UV	
Active Area Diameter (mm)		19	
Calibration Uncertainty (%)(k=2)		±1	
Calibration Wavelength (nm)		514	
Cooling Method		Air-cooled	
Cable Type		PM DB-25	
Cable Length (m)		2	
Part Number	1098457	1098423	1098498**

**C24 Quick Ship program: eligible for next business day shipment.

PM2X

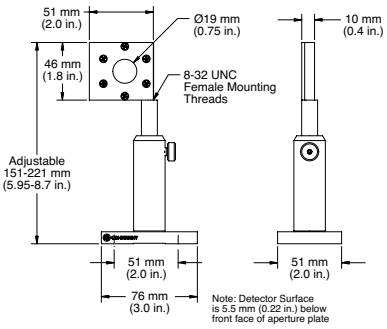

PM10x

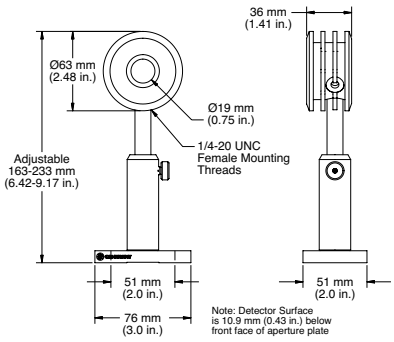

PM30x

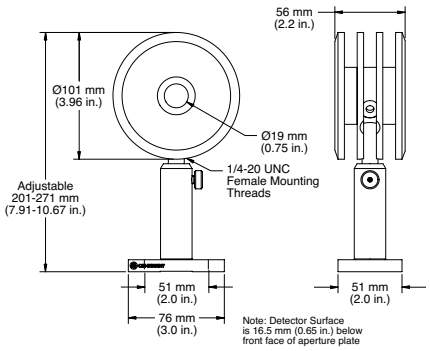

Thermopile Sensors with UV Coating

300 mW to 150W

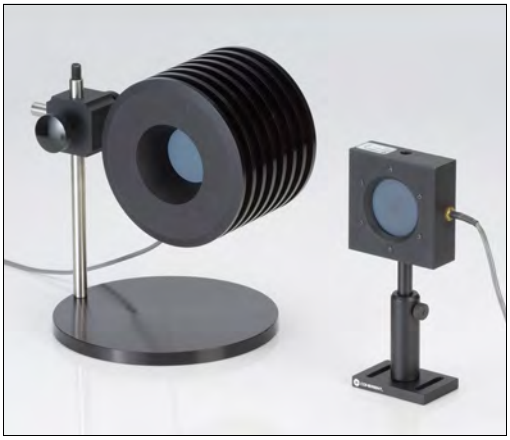

PM150X and PM150-50XC

Features

- UV coating is optimized for DUV
- Spectral Range: 0.15 µm to 1 µm
- 30 mW resolution
- 50 mm apertures

Device Specifications

ISO/IEC 17025:2005

AC-1630

Model	PM150X	PM150-50XC
Wavelength Range (µm)	0.15 to 1	
Power Range	300 mW to 150W	
Long-Pulse Joules Range (J)	1 to 150	
Maximum Intermittent Power (<5 min.)(W)	300	80 (air-cooled)
Resolution (mW)	30	
Maximum Power Density (kW/cm²)	6	
Maximum Energy Density (mJ/cm²)	600, 1064 nm, 10 ns	
Response Time (sec.)	5	
Detector Coating	UV	
Active Area Diameter (mm)	50	
Calibration Uncertainty (%)(k=2)	±1	
Calibration Wavelength (nm)	514	
Cooling Method	Air-cooled	Water-cooled
Cable Type	PM DB-25	
Cable Length (m)	2	
Part Number[1]	1098455	1098443

[1] Water fittings are included with PM150-50XC.

PM150X

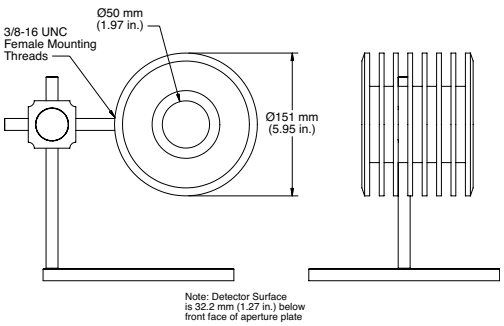

PM150-50XC

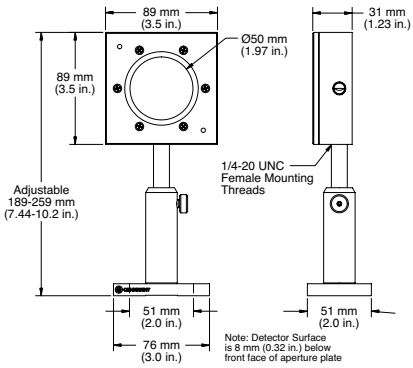

Thermopile Sensors with UV Coating

1W to 300W

POWER & ENERGY
Power & Energy Meters
PowerMax-Pro Sensors
USB/RS Power Sensors
DB-25 Power Sensors
USB/RS Energy Sensors
DB-25 Energy Sensors
Custom & OEM
BEAM DIAGNOSTICS
CALIBRATION & SERVICE
Laser Cross-Reference Index
Model Name Index

PM200F-50X and PM300F-50X

Features

- UV coating is optimized for DUV
- Spectral Range: 0.15 µm to 1 µm
- 100 mW resolution
- 50 mm apertures

Device Specifications

ISO/IEC 17025:2005

AC-1630

Model	PM200F-50X	PM300F-50X
Wavelength Range (µm)	0.15 to 1	
Power Range (W)	1 to 200	1 to 300
Long-Pulse Joules Range (J)	1 to 200	1 to 300
Maximum Intermittent Power (<5 min.)(W)	300	450
Resolution (mW)	100	100
Maximum Power Density (kW/cm²)	6	
Maximum Energy Density (mJ/cm²)	600, 1064 nm, 10 ns	
Response Time (sec.)	5	
Detector Coating	UV	
Active Area Diameter (mm)	50	
Calibration Uncertainty (%)(k=2)	±1	
Calibration Wavelength (nm)	514	
Cooling Method	Fan-cooled	
Cable Type	PM DB-25	
Cable Length (m)	2	
Part Number[2]	1113493	1098481

PM200F-50X

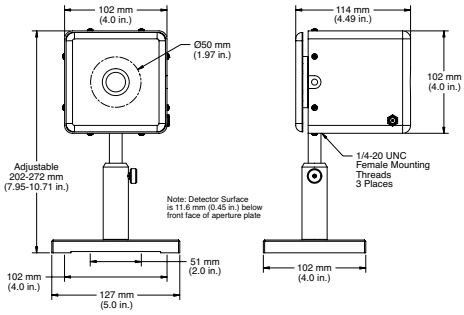

PM300F-50X

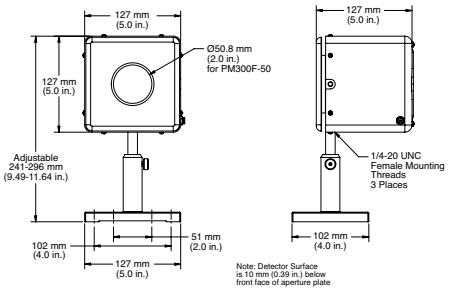

Thermopile Sensors with UV Coating

100W to 1 kW

PM1KX and PM1KX-100

Features

- UV coating is optimized for DUV
- Spectral Range: 0.15 µm to 1 µm
- 1W resolution
- 50 mm and 100 mm apertures

Device Specifications

ISO/IEC 17025:2005

AC-1630

Model	PM1KX	PM1KX-100
Wavelength Range (µm)	0.15 to 1	
Power Range (W)	1 to 1000	
Long-Pulse Joules Range (J)	–	
Maximum Intermittent Power (<5 min.)(W)	1500	
Resolution (mW)	1000	
Maximum Power Density[1] (kW/cm²)	1 to 2.5	
Maximum Energy Density (mJ/cm²)	600, 1064 nm, 10 ns	
Response Time (sec.)	30	45
Detector Coating	UV	
Active Area Diameter (mm)	50	100
Calibration Uncertainty (%)(k=2)	±3	
Calibration Wavelength (nm)	1070	
Cooling Method	Water-cooled	
Cable Type	PM DB-25	
Cable Length (m)	2	
Part Number[2]	1115484	1152086

[1] The damage resistance of the coating is dependent upon the beam size and profile, the average power level, and the water flow rate. Contact Coherent or your local representative for details related to your application.

[2] Water fittings are included with PM1KX and PM1KX-100.

PM1KX

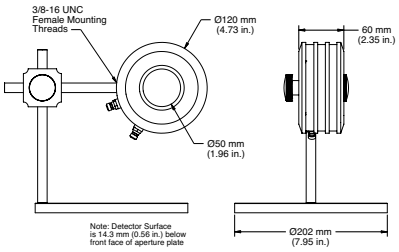

PM1KX-100

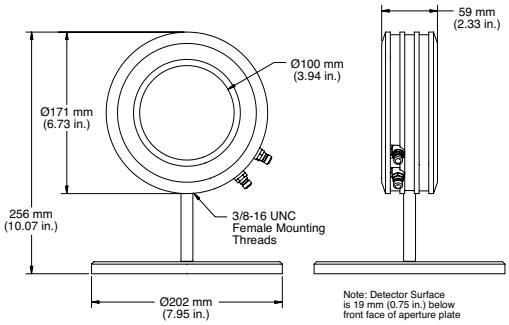

Power Sensor Accessories

Thermal SmartSensor Adapter

Thermal SmartSensor Adapter

The Thermal SmartSensor Adapter converts LM-model position-sensing thermopiles and LM-2 optical sensors for use with FieldMaxII and FieldMate meters.

Designed for use with multiple sensors, this adapter can read the sensor EEPROM contents and program itself when powered up via the meter connection.

Note: Beam position information is not available when using these meters.

Part Number	Description
1056827**	Thermal SmartSensor Adapter

**C24 Quick Ship program: eligible for next business day shipment.

1000:1 Attenuator

1000:1 Attenuator

This attenuator is used with OP-2 VIS, LM-2 VIS, OP-2 IR and LM-2 IR sensors to allow operation up to 5W in the visible and 3W in the infrared regions. The attenuator threads into the sensor in place of the light shield to provide from 1100:1 to 950:1 attenuation. Each attenuator is calibrated for 1000:1 ±5% at 635 nm and is supplied with a calibration certificate. The useful spectral range is 400 to 1800 nm. The clear input aperture is 0.312" (7.9 mm) in diameter.

Part Number	Description
1098318**	1000:1 Attenuator for OP-2 and LM-2 Sensors

**C24 Quick Ship program: eligible for next business day shipment.

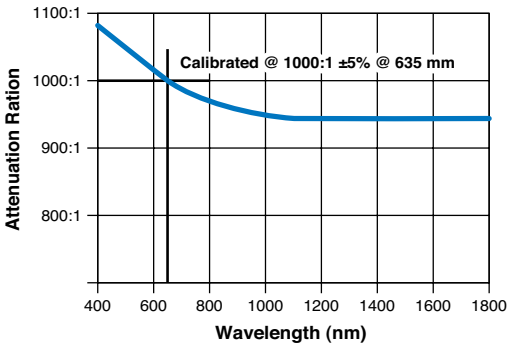

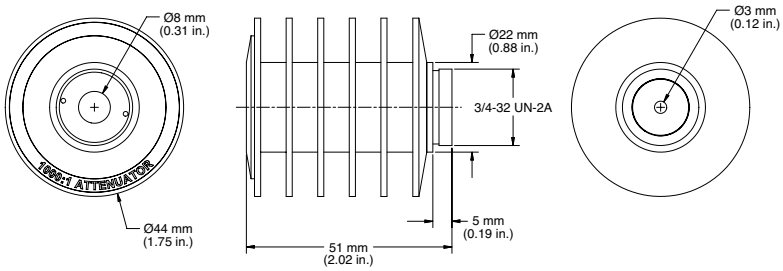

SMA and FC Adapters

Power Sensor Accessories

Fiber-Optic Connector Adapters

SMA and FC Adapters

The following fiber-optic adapters can be mounted directly onto the 3/4-32 threads on the front of LM-2, OP-2, LM-3, LM-10, and LM-150FS sensors. These fiber adapters can also be used with our 1.035-40M adapter ring to fit on the LM-20, LM-45, LM-100, LM-150 LS, and LM-200 sensors.

Part Number	Description	Sensors
1098589	SMA-Type Connector	LM-2, OP-2, LM-3, LM-10, LM-150 FS
1098339**	FC/PC-Type Connector	LM-2, OP-2, LM-3, LM-10, LM-150 FS
33-9432-000	1.035-40M Adapter Ring	LM-20, LM-45, LM-100, LM-150 LS, LM-200

**C24 Quick Ship program: eligible for next business day shipment.

SMA and FC Adapters

The following fiber adapters can be mounted onto the front of the PS10 sensor in place of the removable light tube.

Part Number	Description	Sensors
0012-3860	PS-SMA-Type Connector	PS10
0012-3863	PS-FC-Type Connector	PS10

Post and Stand

2-inch Delrin Post, 2-inch Post/Stand Assembly,
4-inch Delrin Post, 4-inch Post/Stand Assembly

Part Number	Description
1257607	2-inch Height Post/Stand Assembly with 2-inch Delrin Post
1097917	4-inch Height Post/Stand Assembly with 4-inch Delrin Post (included with most Power Sensors, as pictured)
1257605	2-inch Delrin Post
0010-1220	4-inch Delrin Post

EnergyMax - Laser Energy Sensors

Introduction and Selection Charts

POWER & ENERGY
Power & Energy Meters
PowerMax-Pro Sensors
USB/RS Power Sensors
DB-25 Power Sensors
USB/RS Energy Sensors
DB-25 Energy Sensors
Custom & OEM
BEAM DIAGNOSTICS
CALIBRATION & SERVICE
Laser Cross-Reference Index
Model Name Index

EnergyMax Sensors

Features

- **Superior damage resistance**
- **High repetition rate operation**
- **Large dynamic range gives each sensor broad coverage**
- **Low noise and excellent linearity for greater accuracy**
- **Large active area**

Coherent EnergyMax sensors enable laser pulse energy measurement over a broad range of wavelengths, repetition rates, pulse energies and beam diameters. With their unique combination of superior performance and user-friendly convenience, EnergyMax sensors are your best choice no matter what your particular laser energy measurement need. EnergyMax sensors are highly linear in terms of repetition rate, laser pulse width, and measured energy. They are also accurate across a broad range of wavelengths due to onboard wavelength compensation. In addition, automatic temperature compensation accounts for changes in ambient temperature, as well as for heat generated by absorption of the laser energy. Temperature compensation also enables the use of user-installable heat sinks for even higher average power handling capabilities. Coherent EnergyMax sensors are the most linear and accurate on the market.

Standard DB-25 terminated sensors that are designed to work with our stand alone meters (such as LabMax and FieldMaxII) can be found on pages 93 to 99. Meterless USB and RS-232 models are on pages 84 to 92.

Fundamental Principles

Unlike all other thermal detectors, pyroelectrics measure the rate of change of the detector temperature, rather than the temperature value itself. As a result, the response speed of the pyroelectric is usually limited by its electrical circuit design and the thermal resistance of the absorptive coating. In contrast, other thermal detectors (such as thermopiles and bolometers) are limited by slower thermal response speeds, typically on the order of seconds. Pyroelectric respond only to changing radiation that is chopped, pulsed or otherwise modulated; ignoring steady background radiation that is not changing with time. Their combination of wide uniform spectral response, sensitivity, and high speed makes pyroelectrics ideal choices for a vast number of electro-optic applications.

The EnergyMax sensor line uses a pyroelectric element to measure the energy in a laser pulse. It does this by producing a large electrical charge for a small change in temperature. The active sensor circuit takes the current from the sensor element and converts it to a voltage that the instrument can measure.

The figure below shows the relationship between the current response of the pyroelectric element and the output voltage of the sensor circuit. The relationship between the current response and the output voltage response is fixed so that the calibrated peak voltage of the output is the integrated energy of the laser pulse. Refer to the User Manual for information on Quantum EnergyMax sensors.

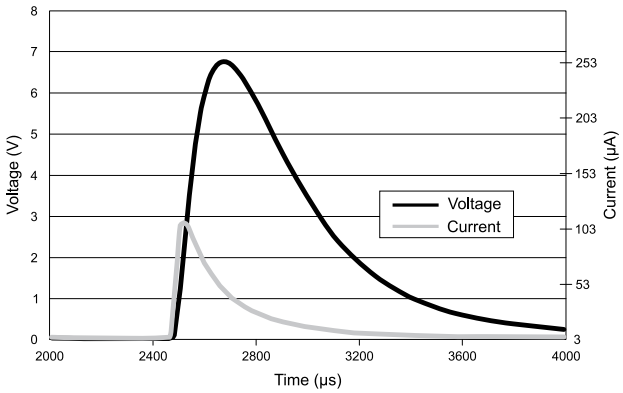

EnergyMax - Laser Energy Sensors

Introduction and Selection Charts

All pyroelectric EnergyMax sensors incorporate a diffuse coating to minimize specular reflections and eliminate spurious beams that can re-enter the laser cavity. In addition, all EnergyMax sensors include onboard electronics that contain built-in wavelength compensation factors. When using the sensor with a meter such as LabMax or FieldMaxII, enter the wavelength of the laser being measured into the meter and this will automatically compensate for the sensor output. The chart below plots the typical absorption percentage of each coating.

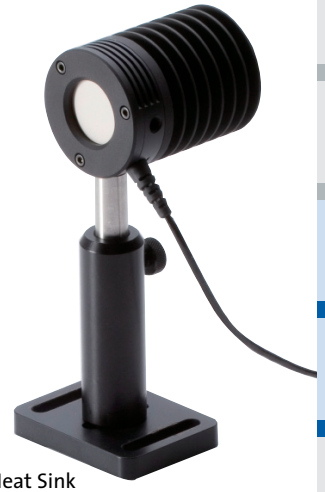

J-25MT-10KHZ
with Medium Heat Sink

Meter Compatibility Chart

	LabMax-TOP	FieldMaxII-TOP & -P	EPM2000
All J-10MB-, J-25MB-, J-50MB-, J-25MUV-, J-50MUV-EnergyMax Models	•	•	•
J-10MT-10KHZ, J-25MT-10KHz, J-50MT-10KHZ EnergyMax Models	•		•
J-10SI- and J-10GE Quantum EnegyMax Models	•		•

Explanation of Part Numbers

EnergyMax part numbers are "Smart" part numbers that have the following meaning:

J –	Active Area Diameter		Coating Type	–	Descriptive Suffix
	10, 25, or 50 mm		MT for Diffuse Metallic MB for MaxBlack MUV for MaxUV		LE for Low Energy HE for High Energy 10 KHZ for Max. Rep. Rate 193 and 248 Calibrated Wavelength

J: Represents an energy sensor

Example: J-10MB-LE is an energy sensor with a 10 mm active area diameter MaxBlack coating for low energy measurements

EnergyMax - Laser Energy Sensors

Applying Wavelength Compensation Accuracy

POWER & ENERGY
Power & Energy Meters
PowerMax-Pro Sensors
USB/RS Power Sensors
DB-25 Power Sensors
USB/RS Energy Sensors
DB-25 Energy Sensors
Custom & OEM
BEAM DIAGNOSTICS
CALIBRATION & SERVICE
Laser Cross-Reference Index
Model Name Index

Overall measurement accuracy is a combination of calibration uncertainty (found in the sensor specification tables) and the wavelength compensation accuracy (found in the "Wavelength Compensation Accuracy" table, below).

The combined accuracy is based upon practices outlined in the National Institute of Standards Guidelines for Evaluating and Expressing Uncertainty (NIST Technical Note 1297, 1994 Edition). The combined accuracy of the measurement is calculated by using the law of propagation of uncertainty using the "root-sum-of-square" (square root of the sum of squares), sometimes described as "summing in quadrature" where:

$$\text{Measurement Accuracy} = \sqrt{U^2 + W^2}$$

where U = 'Percent Calibration Uncertainty' and W = 'Wavelength Accuracy'

Example 1

J-10SI-HE used at 355 nm

U = 3%
W = 5%

$$\text{Measurement Accuracy} = \sqrt{3^2 + 5^2} = \sqrt{9 + 25} = 5.8\%$$

Example 2

J-10MB-LE used at 532 nm

U = 2%
W = 2%

$$\text{Measurement Accuracy} = \sqrt{2^2 + 2^2} = \sqrt{4 + 4} = 2.8\%$$

Wavelength Compensation Accuracy

Model	Wavelength Compensation Accuracy (%) (for wavelengths other than the calibration wavelength)	Calibration Wavelength (nm)
All Multipurpose Sensors (MaxBlack Coating)	±2	1064
All High Repetition Rate Sensors (Diffuse Metallic Coating)	±3	1064
J-50MB-YAG	±2	1064
J-50MB-IR	±3	1064, 2940
J-25MB-IR	±4	1064
J-25MUV-193	±3	193
J-25MUV-248	±3	248
J-50MUV-193	±4	193
J-50MUV-248	±4	248
J-10SI-LE	±5	532
J-10SI-HE	±5	532
J-10GE	±5	1064

EnergyMax - Laser Energy Sensors

Introduction and Selection Charts

The next table summarizes the maximum average power rating for each sensor. These power levels are achieved by combining active temperature compensation circuitry and enhanced thermal management techniques. Maximum average power is wavelength dependent because absorption changes with wavelength. Reference the spectral absorption chart on the previous page for use at wavelengths other than those listed in the table below. Maximum average power is inversely proportional to the spectral absorption.

The 25 mm and 50 mm aperture sensors can accept optional heat sinks that users can install by mounting them on the back of the sensor. The heat sinks expand the average power handling capability as outlined below. See the Accessories section on page 100 for more information about heat sinks.

EnergyMax Average Power Capabilities[1]

Model	Wavelength[5] (nm)	Heat Sink: None	Small	Medium	Large
J-50MB-HE[2] & -LE[2]	1064	10W	–	–	24W
J-25MB-HE[3] & -LE[3]	1064	5W	10W	15W	–
J-10MB-HE[4] & -LE[4]	1064	4W	–	–	–
J-50MT-10KHZ[2]	1064	20W	–	–	49W
J-25MT-10KHZ[3]	1064	10W	20W	31W	–
J-10MT-10KHZ[4]	1064	1W	–	–	–
J-50MB-YAG[2]	1064	20W	–	–	48W
J-50MB-IR	1064, 2940	15W	–	–	–
J-25MB-IR[3]	1064	20W	41W	62W	–
J-50MUV-248[2] w/o Diffuser	248	10W	–	–	25W
J-50MUV-248[2] w/Diffuser	248	15W	–	–	36W
J-50MUV-193[2] w/o Diffuser	193	10W	–	–	30W
J-50MUV-193[2] w/Diffuser	193	18W	–	–	43W
J-25MUV-248[3]	248	5W	10W	16W	–
J-25MUV-193[3]	193	5W	10W	15W	–

[1] Not applicable for Quantum EnergyMax sensors.
[2] 50 mm EnergyMax sensors are compatible with the large heat sink.
[3] 25 mm EnergyMax sensors are compatible with small and medium heat sinks.
[4] 10 mm EnergyMax sensors do not have a heat sink available.
[5] Average power ratings are based upon testing at the listed wavelength.

Use the following chart to identify the energy range for the standard DB-25 EnergyMax models. Selection charts on the following pages of this guide will help you select more exactly the best sensor for your application. See page 99 for typical dynamic range curves of Quantum EnergyMax Sensors.

Standard DB-25 EnergyMax Energy Range Capabilities

Model	Energy Range
J-50MB-HE (DB-25)	1 mJ to 2J
J-50MB-LE (DB-25)	250 µJ to 500 mJ
J-25MB-HE (DB-25)	500 µJ to 1J
J-25MB-LE (DB-25)	25 µJ to 50 mJ
J-10MB-HE (DB-25)	10 µJ to 20 mJ
J-10MB-LE (DB-25)	300 nJ to 600 µJ
J-50MT-10KHZ (DB-25)	500 µJ to 1J
J-25MT-10KHZ (DB-25)	50 µJ to 100 mJ
J-10MT-10KHZ (DB-25)	100 nJ to 200 µJ
J-50MB-YAG (DB-25)	1.5 mJ to 3J
J-50MB-IR (DB-25)	1 mJ to 3J
J-25MB-IR (DB-25)	1.5 mJ to 3J
J-50MUV-248 (DB-25)	500 µJ to 1J
J-50MUV-193 (DB-25)	125 µJ to 250 mJ
J-25MUV-248 (DB-25)	125 µJ to 250 mJ
J-25MUV-193 (DB-25)	50 µJ to 100 mJ

Wide Dynamic Range for All EnergyMax Sensor Categories

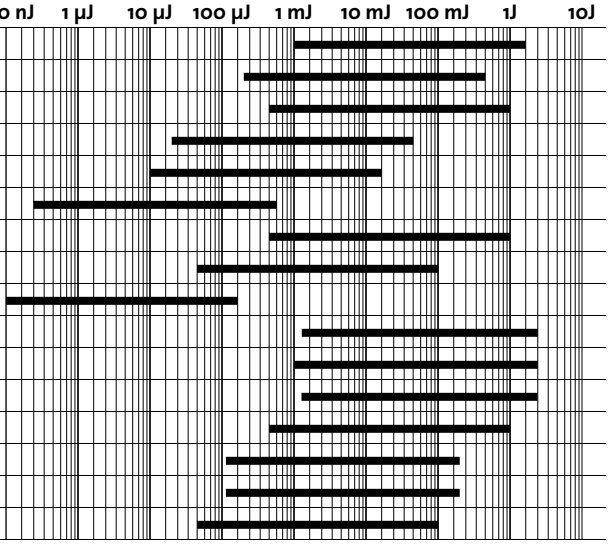

EnergyMax - Laser Energy Sensors

Introduction and Selection Charts

POWER & ENERGY
Power & Energy Meters
PowerMax-Pro Sensors
USB/RS Power Sensors
DB-25 Power Sensors
USB/RS Energy Sensors
DB-25 Energy Sensors
Custom & OEM
BEAM DIAGNOSTICS
CALIBRATION & SERVICE
Laser Cross-Reference Index
Model Name Index

The following chart outlines the energy range for the "meterless" USB and RS-232 EnergyMax sensors. The meterless EnergyMax have a slightly different minimum energy specification compared to the standard models. See page 99 for typical dynamic range curves of the Quantum EnergyMax Sensor.

EnergyMax-USB/RS Energy Range Capabilities

Model	Energy Range
J-50MB-HE (USB/RS)	1.6 mJ to 2J
J-50MB-LE (USB/RS)	400 µJ to 500 mJ
J-25MB-HE (USB/RS)	850 µJ to 1J
J-25MB-LE (USB/RS)	50 µJ to 50 mJ
J-10MB-HE (USB/RS)	12 µJ to 20 mJ
J-10MB-LE (USB/RS)	500 nJ to 600 µJ
J-50MT-10KHZ (USB/RS)	400 µJ to 1J
J-25MT-10KHZ (USB/RS)	90 µJ to 100 mJ
J-10MT-10KHZ (USB/RS)	300 nJ to 200 µJ
J-50MB-YAG (USB/RS)	2.4 mJ to 3J
J-50MB-IR (USB/RS)	3.2 mJ to 3J
J-50MUV-248 w/Diffuser (USB/RS)	800 µJ to 1J
J-25MUV-193 (USB/RS)	90 µJ to 100 mJ

Wide Dynamic Range for All EnergyMax Sensor Categories

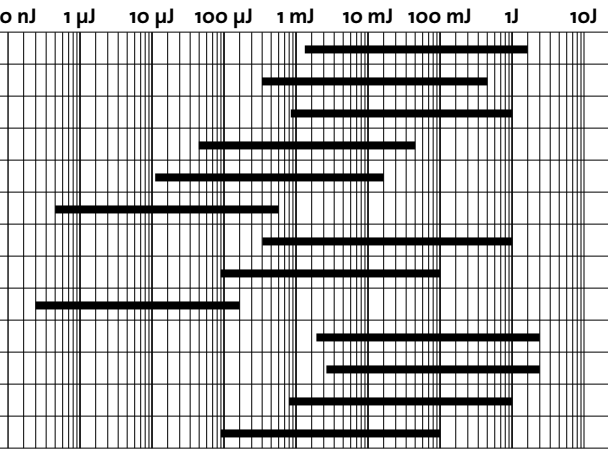

The next selection chart shows the range of wavelengths that can be measured with each sensor. This characteristic is coating dependent, so sensors with diffusers may have a narrower spectral range than similar sensors without diffusers.

The spectral compensation of each sensor is unique to that serial number, and is based upon spectral scans performed on each sensor disk (and on each optic if the sensor has a diffuser). The spectral compensation provides greater measurement accuracy for wavelengths that differ from the optical calibration wavelength.

EnergyMax Wavelength Capabilities

Model	Wavelength (µm)
J-10SI-HE & -LE	0.325 to 0.9
J-10GE	0.8 to 1.7
J-50MB-HE & -LE	0.19 to 12.0
J-25MB-HE & -LE	0.19 to 12.0
J-10MB-HE & -LE	0.19 to 12.0
J-50MT-10KHZ	0.19 to 2.1
J-25MT-10KHZ	0.19 to 2.1
J-10MT-10KHZ	0.19 to 2.1
J-50MB-YAG	0.266 to 2.1
J-50MB-IR	0.5 to 3.0
J-25MB-IR	0.532 to 2.1
J-50MUV-248 w/o Diffuser	0.19 to 2.1
J-50MUV-248 w/Diffuser	0.19 to 0.266
J-50MUV-193 w/o Diffuser	0.19 to 2.1
J-50MUV-193 w/Diffuser	0.19 to 0.266
J-25MUV-248	0.19 to 2.1
J-25MUV-193	0.19 to 2.1

Wavelength (µm)

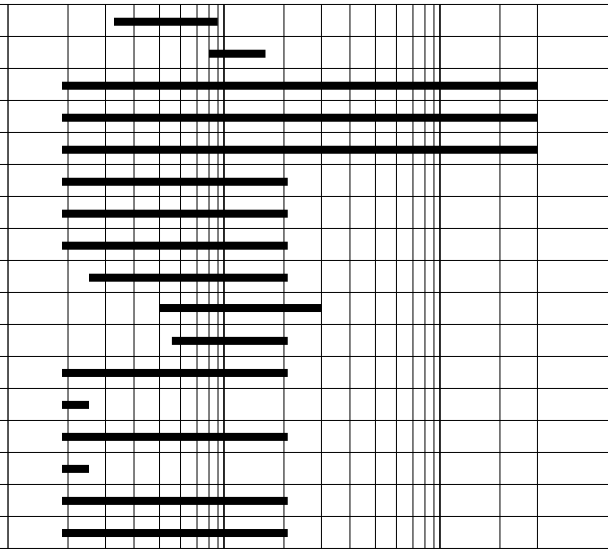

EnergyMax - Laser Energy Sensors

Introduction and Selection Charts

EnergyMax sensors are based upon pyroelectric technology and can therefore measure lasers at high repetition rates. The maximum repetition rate is primarily dependent upon the thermal resistance of the coating and the maximum pulse width the sensor is designed to measure. Refer to the specifications in product pages for maximum laser pulse width limitations.

EnergyMax Repetition Rate Capabilities

Model	Rep. Rate (pps)
J-10SI-HE & -LE	up to 10,000
J-10GE	up to 10,000
J-50MB-HE & -LE	up to 300
J-25MB-HE & -LE	up to 1000
J-10MB-HE & -LE	up to 1000
J-50MT-10KHZ	up to 10,000
J-25MT-10KHZ	up to 10,000
J-10MT-10KHZ	up to 10,000
J-50MB-YAG	up to 50
J-50MB-IR	up to 30
J-25MB-IR	up to 20
J-50MUV-248	up to 200
J-50MUV-193	up to 200
J-25MUV-248	up to 500
J-25MUV-193	up to 500

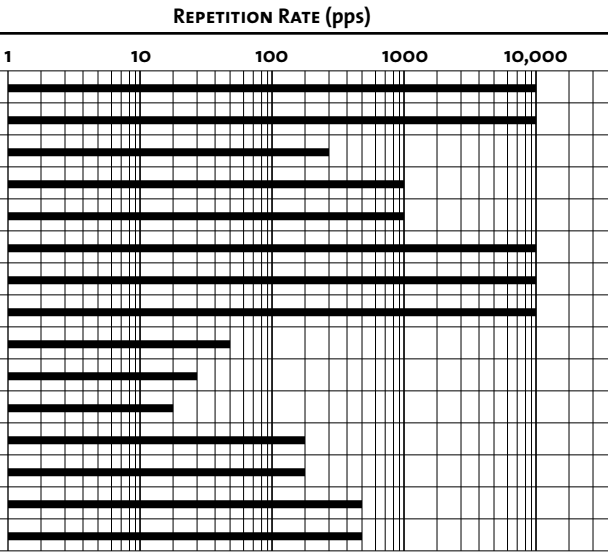

Before using a sensor, it is important to ensure that the laser beam will not damage the sensor coating. The damage threshold is also wavelength dependent, and maximum energy density thresholds are listed for common laser wavelengths in the table below. At other wavelengths it is safe to interpolate between the listed values.

EnergyMax Damage Threshold Capabilities[1]

	Damage Threshold (mJ/cm²)					
Model	**193 nm**	**248 nm**	**266 nm**	**355 nm**	**532 nm**	**1064 nm**
J-50MB-HE	40	170	170	140	250	500
J-50MB-LE	40	170	170	140	250	500
J-25MB-HE	40	170	170	140	250	500
J-25MB-LE	40	170	170	140	250	500
J-10MB-HE	40	170	170	140	250	500
J-10MB-LE	40	170	170	140	250	500
J-50MT-10KHZ	150	200	200	390	500	500
J-25MT-10KHZ	150	200	200	390	500	500
J-10MT-10KHZ	40	40	40	50	50	50
J-50MB-YAG	–	–	1000	750	2800	14,000
J-25MB-IR	–	–	–	–	1500	5000
J-50MUV-248 w/o Diffuser	200	260	260	300	375	375
J-50MUV-248 w/Diffuser	400	520	520	–	–	–
J-50MUV-193 w/o Diffuser	200	260	260	300	375	375
J-50MUV-193 w/Diffuser	400	520	520	–	–	–
J-25MUV-248	200	260	260	300	375	375
J-25MUV-193	200	260	260	300	375	375

[1] Not applicable for Quantum EnergyMax sensors.

EnergyMax-USB/RS Sensors

Product Overview

POWER & ENERGY
Power & Energy Meters
PowerMax-Pro Sensors
USB/RS Power Sensors
DB-25 Power Sensors
USB/RS Energy Sensors
DB-25 Energy Sensors
Custom & OEM
BEAM DIAGNOSTICS
CALIBRATION & SERVICE
Laser Cross-Reference Index
Model Name Index

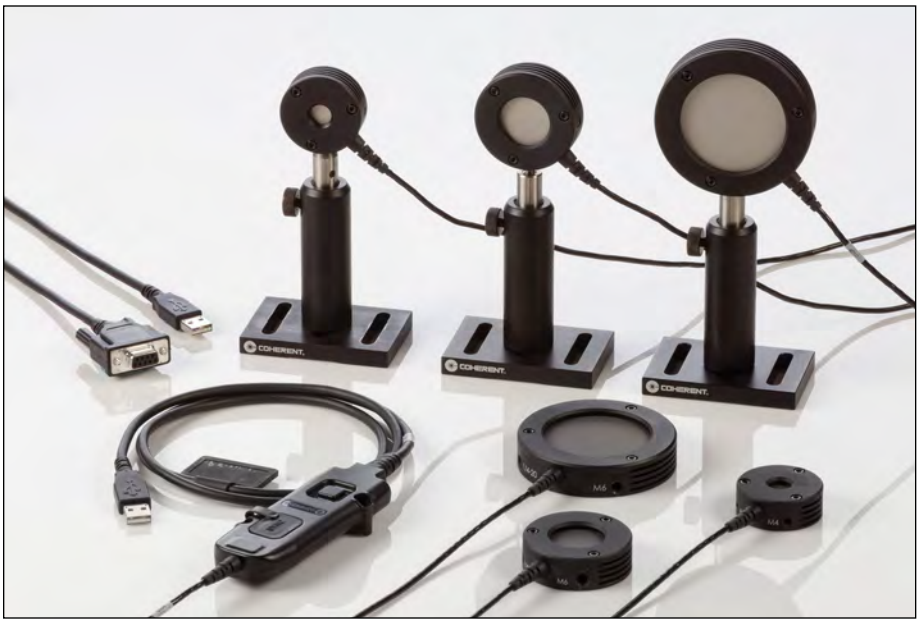

Coherent's high performance EnergyMax sensors are also available in a meterless form factor with either RS-232 or USB 2.0 connectivity. This product range enables measurement of the energy per pulse or average power of pulsed lasers from the nanojoule to the multi-joule level, over wavelengths from the deep ultraviolet through the far infrared, and from single pulses to repetition rates of 10 kHz (with measurement of every pulse). Furthermore, multiple EnergyMax sensors can share a trigger (internal or external) for synchronized operation, such as to enable pulse ratiometry.

These meterless sensors are particularly attractive to system builders because their small size allows them to be easily embedded within instrumentation, and their RS-232 or USB communications capabilities facilitate automated operation by a host computer.

Furthermore, EnergyMax USB/RS sensors significantly reduce the user's overall cost of ownership by eliminating the need to purchase a separate, more costly meter with each sensor, and by reducing annual calibration costs associated with integrating the electronics into the sensor. These products are also useful in the lab and research setting because they can be used as standalone instruments with a computer, or integrated smoothly into any experiment with an automated control and data acquisition system.

The Meterless Advantage

Low Cost of Ownership

- **Lower initial price – because no separate meter**
- **Lower calibration cost – because electronics are integrated into sensor**
- **Easy to adapt with apps software and drivers**
- **Less costly multi-channel operation**

Embedded OEM Integration

- **Flexibility of RS-232 and USB PC interfaces**
- **Compact size**
- **Easy ASCII host commands**
- **USB sensors attach as virtual COM port**

State-of-the-Art Sensor Energy Technology

- **Based upon industry leading EnergyMax sensors**
- **High accuracy**
- **High damage threshold**
- **High repetition rate with large active areas**
- **High dynamic range**

EnergyMax-USB/RS Sensors

Product Overview

Main Product Features

- Able to measure every pulse up to 10 kHz and stream this data over the host port (USB only). RS-232 capable of measuring every pulse up to 10 Khz and streaming data over host port at a rate of 1 kHz.
- EnergyMax-USB provides direct USB high speed 2.0 connection to PC. Power provided via USB connection.
- EnergyMax-RS provides RS-232 connectivity. Power input provided via +4-20 VDC input.
- Fast 14-bit A/D converter supports measurement accuracy similar to that found in Coherent's top-of-the-line LabMax meter
- Up to five digits of measurement resolution
- Each sensor incorporates a unique spectral compensation curve for accurate use at wavelengths that differ from the calibration wavelength
- External and Internal triggering available (trigger cable included)

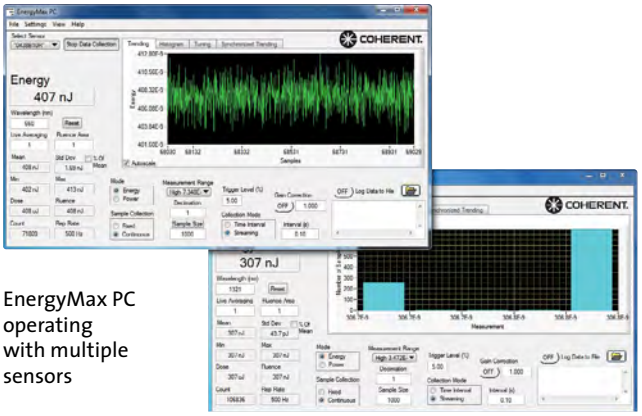

EnergyMax PC operating with multiple sensors

- Units can share triggers to provide synchronized measurements for applications such as ratiometry
- Order optional power supply #1105557 to provide 5VDC power the EnergyMax-RS sensors

Main Software Features

EnergyMax PC applications software is supplied free with sensor and includes the following features:

- Trending, tuning, histogram at data rate up to 1 kHz
- Statistics (mean, minimum, maximum, and standard deviation, dose, fluence, and missed pulses)
- Ability to log data to a file at up to 10kHz (in Turbo mode)
- Operate multiple devices simultaneously and perform synchronized ratiometery (A/B analysis). Trend and log results to file.

For system integration and for implementations involving customer written software the sensors provide an in depth command set that is easy to access:

- USB sensors connect on Virtual COM port, thus supporting simple ASCII host commands communication for remote interfacing
- National Instruments LabVIEW drivers are supplied for easy LabVIEW integration

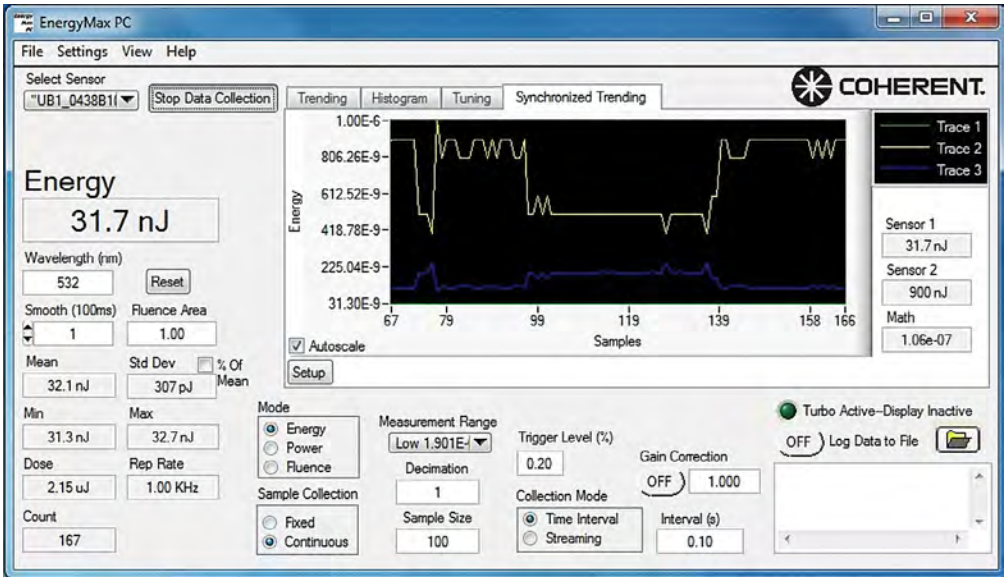

EnergyMax PC in synchronized ratiometric trending mode

EnergyMax-USB/RS Sensors

MaxBlack Coating

POWER & ENERGY
Power & Energy Meters
PowerMax-Pro Sensors
USB/RS Power Sensors
DB-25 Power Sensors
USB/RS Energy Sensors
DB-25 Energy Sensors
Custom & OEM
BEAM DIAGNOSTICS
CALIBRATION & SERVICE
Laser Cross-Reference Index
Model Name Index

J-50MB-HE, J-25MB-HE and J-10MB-HE

Features

- Unique MaxBlack coating increases damage threshold, allows high repetition rate operation, and improves mechanical durability
- Operate over the 190 nm to 12 µm range
- Enable pulse energy measurements from 500 nJ to 2J with high signal-to-noise characteristics
- Measure single shot to 1 kHz repetition rate
- Spectral compensation characteristics built into each unit
- Onboard sensors provide automatic temperature compensation

These sensors allow measurements over a wide range of wavelengths, beam diameters, average power levels, and repetition rates. The MaxBlack coating on these sensors provides significant damage resistance and mechanical durability characteristics compared to the black paint coatings often used on broadband sensors in the past.

Device Specifications

ISO/IEC 17025:2005

AC-1630

Model	J-50MB-HE	J-50MB-LE	J-25MB-HE	J-25MB-LE	J-10MB-HE	J-10MB-LE
Energy Range	1.6 mJ to 2J	400 µJ to 500 mJ	850 µJ to 1J	50 µJ to 50 mJ	12 µJ to 20 mJ	500 nJ to 600 µJ
Noise Equivalent Energy	<160 µJ	<40 µJ	<85 µJ	<5 µJ	<1.2 µJ	<50 nJ
Wavelength Range (µm)	0.19 to 12					
Active Area Diameter (mm)	50	50	25	25	10	10
Maximum Average Power[1] (W)	10	10	5	5	4	4
Maximum Pulse Width (µs)	57		17			
Maximum Repetition Rate (pps)	300	300	1000	1000	1000	1000
Maximum Energy Density (mJ/cm²)	500 (at 1064 nm, 10 ns)					
Detector Coating	MaxBlack					
Diffuser	No					
Calibration Wavelength (nm)	1064					
Calibration Uncertainty (%)(k=2)	±2					
Energy Linearity (%)	±3					
Cable Length (m)	3					
Cable Type	USB and RS					
Part Number						
USB	1191444	1191443	1191442	1191441**	1191436	1191435**
RS	1191432	–	–	1191431	1191429	1191428

[1] Extend average power range with optional heat sink. See page 100.

**C24 Quick Ship program: eligible for next business day shipment.

J-25MB-HE and -LE

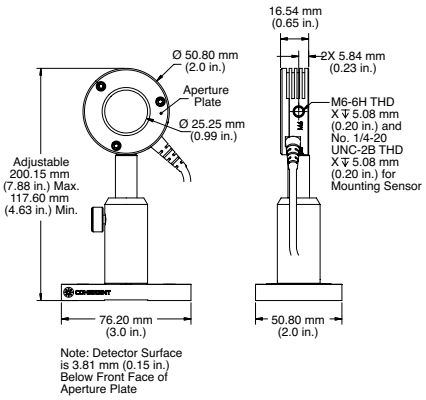

J-50MB-HE and -LE

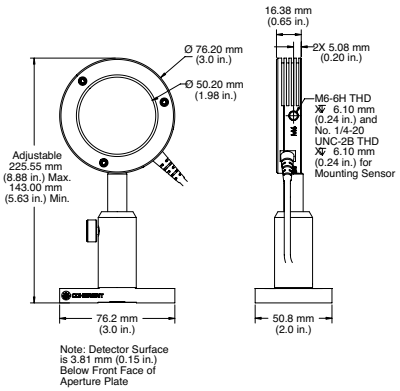

J-10MB-HE and -LE

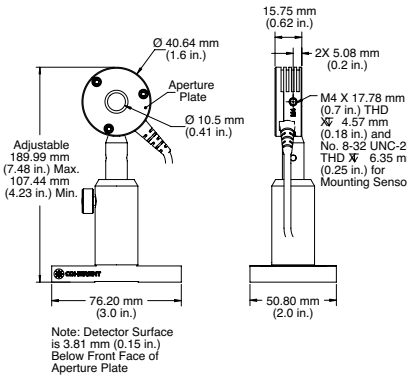

EnergyMax-USB/RS Sensors

Diffuse Metallic Coating

J-50MT-10KHZ, J-25MT-10KHZ and J-10MT-10KHZ

Features

- Unique diffuse metallic coating delivers increased damage threshold, allows high repetition rate operation and reduces specular reflectance
- Operate over the entire 190 nm to 2.1 µm range
- Enable pulse energy measurements from 300 nJ to 1J with high signal-to-noise characteristics
- Measure every pulse up to 10 kHz repetition rate
- Spectral compensation characteristics built into each unit
- Onboard sensors provide automatic temperature compensation[1]

These sensors use a diffuse metallic coating that enables measurements at high and low repetition rates across a wide range of energies, wavelengths and beam sizes. The damage resistance at 532 nm and shorter wavelengths is even greater than the MaxBlack coating. These are great all-purpose sensors for the 190 nm to 2.1 µm region and offer the lowest energy range of our EnergyMax line.

Device Specifications

ISO/IEC 17025:2005

AC-1630

Model	J-50MT-10KHZ	J-25MT-10KHZ	J-10MT-10KHZ
Energy Range	400 µJ to 1J	90 µJ to 100 mJ	300 nJ to 200 µJ
Noise Equivalent Energy	<40 µJ	<9 µJ	<30 nJ
Wavelength Range (µm)	0.19 to 2.1		
Active Area Diameter (mm)	50	25	10
Maximum Average Power[2] (W)	20	10	1
Maximum Pulse Width (µs)	1.7		
Maximum Repetition Rate (pps)	10,000		
Maximum Energy Density (mJ/cm²)	500 (at 1064 nm, 10 ns)		50 (at 1064 nm, 10 ns)
Detector Coating	Diffuse Metallic		
Diffuser	No		
Calibration Wavelength (nm)	1064		
Calibration Uncertainty (%)(k=2)	±2		
Energy Linearity (%)	±3		
Cable Length (m)	3		
Cable Type	USB and RS		
Part Number			
USB	1191447	1191446	1191445
RS	1191433	–	–

[1] Except J-10MT-10KHZ.

[2] Extend average power range with optional heat sink. See page 100.

J-50MT-10KHZ

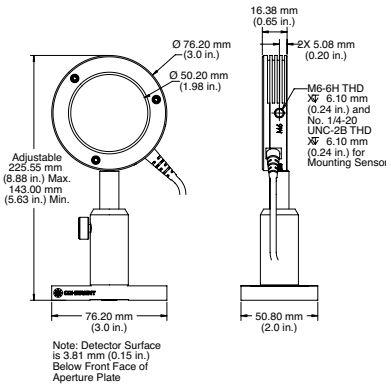

J-25MT-10KHZ

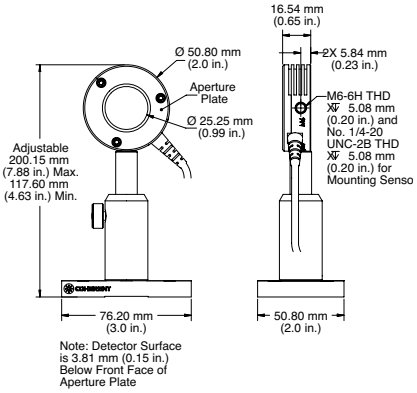

J-10MT-10KHZ

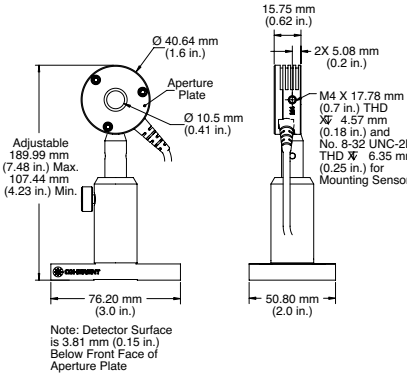

EnergyMax-USB/RS Sensors

MaxBlack Coating and Diffusers

POWER & ENERGY
Power & Energy Meters
PowerMax-Pro Sensors
USB/RS Power Sensors
DB-25 Power Sensors
USB/RS Energy Sensors
DB-25 Energy Sensors
Custom & OEM
BEAM DIAGNOSTICS
CALIBRATION & SERVICE
Laser Cross-Reference Index
Model Name Index

J-50MB-YAG

Features

- **Very high energy and peak power handling capabilities**
- **Operate at Nd: YAG fundamental and harmonics**
- **Enable pulse energy measurements from 2.4 mJ to 15J**
- **Spectral compensation characteristics built into each unit**
- **Onboard sensors provide automatic temperature compensation**
- **No need to either change diffusers during use or perform your own spectral calibrations**

These sensors are specifically designed for high energy and high peak power lasers operating at relatively low repetition rates, such as those based on Nd:YAG, Ruby, Ho:YAG and Erbium. The J-50MB-YAG sensor can be used with beams up to 35 mm in diameter and can work at 1064 nm, 532 nm, 355 nm and 266 nm without the need to change or self-calibrate diffusers or any other accessories. Sensors combine a MaxBlack coating and a diffuser to produce superior damage resistance characteristics. This combination enables operation with lasers that produce either very high energy per pulse or very high peak fluences.

Device Specifications

ISO/IEC 17025:2005

AC-1630

Model[1]	J-50MB-YAG	J-50MB-YAG-1528	J-50MB-YAG-1535
Energy Range	2.4 mJ to 3J	2.4 mJ to 3J	12 mJ to 15J
Noise Equivalent Energy (µJ)		<240	
Wavelength Range (µm)		0.266 to 2.1	
Maximum Beam Size (mm)		35	
Maximum Average Power[1] (W)		20	
Maximum Pulse Width	340 µs	57 µs	2 ms[2]
Maximum Repetition Rate (pps)	50	300	10
Maximum Energy Density (J/cm^2)		14.0 (at 1064 nm, 10 ns) 2.8 (at 532 nm, 10 ns) 0.75 (at 355 nm, 10 ns) 1.0 (at 266 nm, 10 ns)	
Detector Coating		MaxBlack	
Diffuser		YAG	
Calibration Wavelength (nm)		1064	
Calibration Uncertainty (%)(k=2)		±2	
Energy Linearity (%)		±3	
Cable Length (m)		3	
Cable Type		USB and RS	
Part Number			
USB	1191437**	1191439	1191438
RS	1191430		1219962

[1] Extend average power range with optional heat sink. See page 100.
[2] Pulsewidths up to 5 ms can be measured with an additional ±1% uncertainty.
**C24 Quick Ship program: eligible for next business day shipment.

J-50MB-YAG

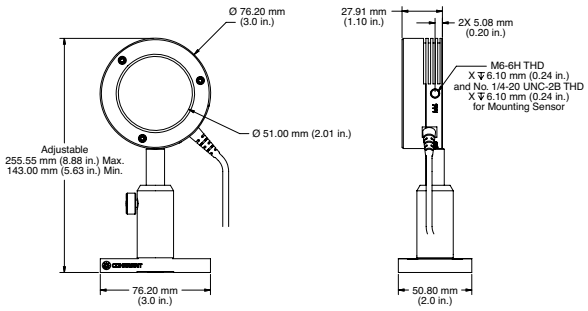

EnergyMax-USB/RS Sensors

MaxBlack Coating and Diffusers

J-50MB-IR

Features

- Very high energy and peak power handling capabilities
- Operate throughout the IR
- Enable pulse energy measurements from 3.2 mJ to 15J
- Spectral compensation characteristics built into each unit
- Onboard sensors provide automatic temperature compensation
- No need to either change diffusers during use or perform your own spectral calibrations

This sensor is much like the J-50MB-YAG on the previous page. The difference is the J-50MB-IR has been designed for use farther into the infrared for use in medical applications using Erbium and Holmium lasers.

Device Specifications

ISO/IEC 17025:2005

AC-1630

Model	J-50MB-IR
Energy Range	3.2 mJ to 3J
Noise Equivalent Energy (µJ)	<320
Wavelength Range (µm)	0.5 to 3.0
Maximum Beam Size (mm)	30
Maximum Average Power[1] (W)	15
Maximum Pulse Width (µs)	1000
Maximum Repetition Rate (pps)	30
Maximum Energy Density (J/cm²)	>100 (at 2940 nm, 100 µs)
Detector Coating	MaxBlack
Diffuser	IR
Calibration Wavelength (nm)	1064, 2940
Calibration Uncertainty (%)(k=2)	±2 at 1064 nm, ±3 at 2940 nm
Energy Linearity (%)	±3.5
Cable Length (m)	3
Cable Type	USB and RS
Part Number	
USB	1191440
RS	–

[1] Extend average power range with optional heat sink. See page 100.

J-50MB-IR

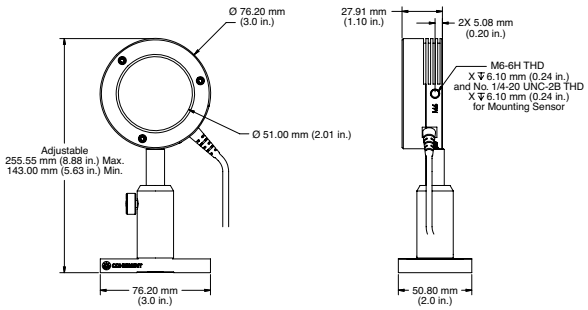

EnergyMax-USB/RS Sensors

MaxUV Coating

POWER & ENERGY
Power & Energy Meters
PowerMax-Pro Sensors
USB/RS Power Sensors
DB-25 Power Sensors
USB/RS Energy Sensors
DB-25 Energy Sensors
Custom & OEM
BEAM DIAGNOSTICS
CALIBRATION & SERVICE
Laser Cross-Reference Index
Model Name Index

J-50MUV-248 and J-25MUV-193

Features

- Unique MaxUV coating delivers highest DUV damage threshold and long-term UV exposure resistance
- Operate over the 190 nm to 2.1 µm range
- Enable pulse energy measurements from 90 µJ to 1J
- Measure up to 400 Hz repetition rate
- Spectral compensation characteristics built into each unit
- Onboard sensors provide automatic temperature compensation

MaxUV-coated EnergyMax sensors are specifically optimized for use with ArF lasers operating at 193 nm and KrF lasers at 248 nm. These sensors feature high accuracy and large active areas (up to 50 mm), and use a unique coating called MaxUV that delivers superior long-term damage resistance.

The 50 mm diameter models incorporate a DUV quartz diffuser for increased resistance to coating damage.

Device Specifications

ISO/IEC 17025:2005

ilac-MRA ANAB ACCREDITED CALIBRATION LABORATORY AC-1630 ISO 17025

Model	J-50MUV-248 w/Diffuser	J-50MUV-193 w/o Diffuser	J-25MUV-193 w/o Diffuser
Energy Range	800 µJ to 1J	200 µJ to 250 mJ	90 µJ to 100 mJ
Noise Equivalent Energy (µJ)	<80	<20	<9
Wavelength Range (µm)	0.19 to 0.266	0.19 to 0.2.1	0.19 to 2.1
Active Area Diameter (mm)	50	50	25
Max. Average Power[1] (W)	15	10	5
Max. Pulse Width (µs)	86	86	43
Max. Rep. Rate (pps)	200	200	500
Max. Energy Density (mJ/cm²)	520 (at 248 nm, 10 ns)	200 (at 193 nm, 10 ns)	200 (at 193 nm, 10 ns)
Detector Coating	MaxUV		
Diffuser	DUV	No	No
Calibration Wavelength (nm)	248	193	193
Calibration Uncertainty (%)(k=2)	±3		
Energy Linearity (%)	±3		
Cable Length (m)	3		
Cable Type	USB		
Part Number USB	1191449	1289935	1191448

[1] Extend average power range with optional heat sink. See page 100.

J-50MUV-248

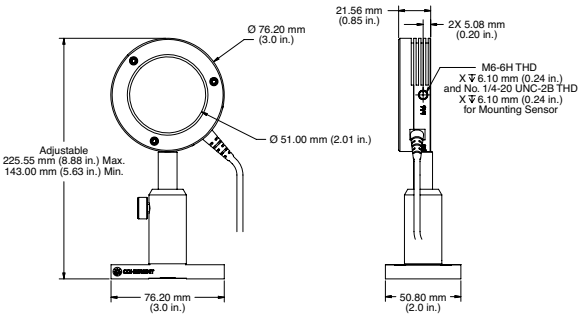

J-25MUV-193

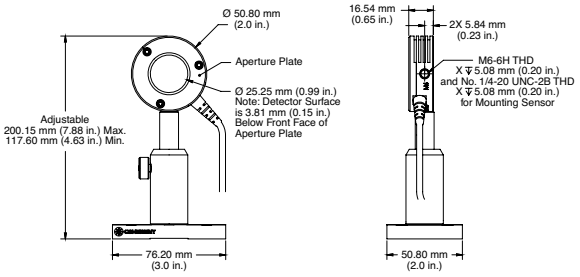

EnergyMax-USB/RS Sensors

Quantum Series

J-10SI-HE/J-10Ge-LE

Features

- **Pulse enegy measurement down to 750 pJ**
- **Average power measurement of pulsed sources from nW to mW level signal-to-noise characteristics**
- **Measures every pulse to 10,000 Hz**
- **Accurate spectral compensation**
  - 325 nm to 900 nm
  - 800 nm to 1700 nm

Quantum EnergyMax sensors enable low energy pulse measurements as well as average power of pulsed systems from the nW to mW level, across a broad range of wavelengths. These sensors have a removable light shield on the front used to block stray light.

Device Specifications

Model	J-10SI-HE	J-10Ge-LE
Energy Range	750 pJ to 775 nJ (at 532 nm)	1 nJ to 600 nJ (at 1064 nm)
Noise Equivalent Energy (pJ)	<75 (at 532 nm)	<100 (at 1064 nm)
Wavelength Range (nm)	325 to 900	800 to 1700
Active Area Diameter[1] (mm)	10	
Max. Avg. Power (mW)	60	
Max. Pulse Width (µs)	1	
Max. Rep. Rate (pps)	10,000	
Sensor	Silicon	Germanium
Diffuser	ND2	
Calibration Wavelength (nm)	532	1064
Calibration Uncertainty (%)(k=2)	±3	
Linearity (%)	±3	
Cable Length (m)	3	
Cable Type	USB and RS	USB
Part Number		
USB	1191434	1286950
RS	1191427	

[1] Beam size must be >4 mm at energies above 200 nJ to avoid saturation.

J-10SI-HE and J-10Ge-LE

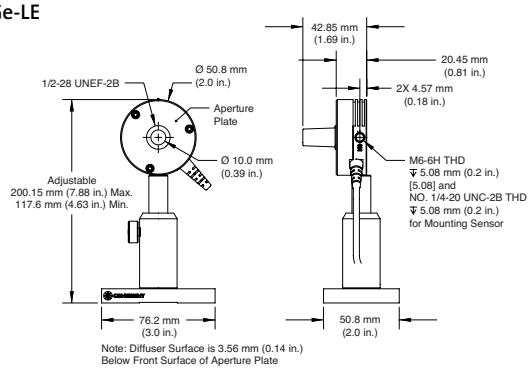

EnergyMax-USB/RS Sensors

Quantum Series

POWER & ENERGY
Power & Energy Meters
PowerMax-Pro Sensors
USB/RS Power Sensors
DB-25 Power Sensors
USB/RS Energy Sensors
DB-25 Energy Sensors
Custom & OEM
BEAM DIAGNOSTICS
CALIBRATION & SERVICE
Laser Cross-Reference Index
Model Name Index

J-10Si-HE

The Quantum EnergyMax sensor incorporates a Silicon photodiode, contains a large 10 mm clear aperture and operates at a repetition rate from single pulse up to 10 kHz (every pulse).

The main difference between a Quantum EnergyMax sensor and other Coherent EnergyMax sensors is their sensitivity. A Quantum EnergyMax sensor is capable of measuring considerably smaller signals than the rest of the EnergyMax sensor line. They do this by utilizing a photodiode—rather than a pyroelectric—element.

Due to the quantum nature of their response, photodiode sensors are inherently more sensitive than pyroelectric sensors, which are thermal-based. One consequence of this extra sensitivity is the possibility of measurement error or noise from stray modulated light sources (for example, stray reflections or room lights) in a laboratory environment. For this reason Quantum EnergyMax sensors are designed for use with a small integrated input beam tube, which limits the field of view of the sensor aperture. This tube is removable for alignment purposes and custom applications.

The following chart plots the minimum and maximum measurable energy across all wavelengths. This chart can be used to determine the measurable energy range for wavelengths other than that in the specifications table (532 nm).

Spectral Sensitivity Curves for Quantum EnergyMax Sensor

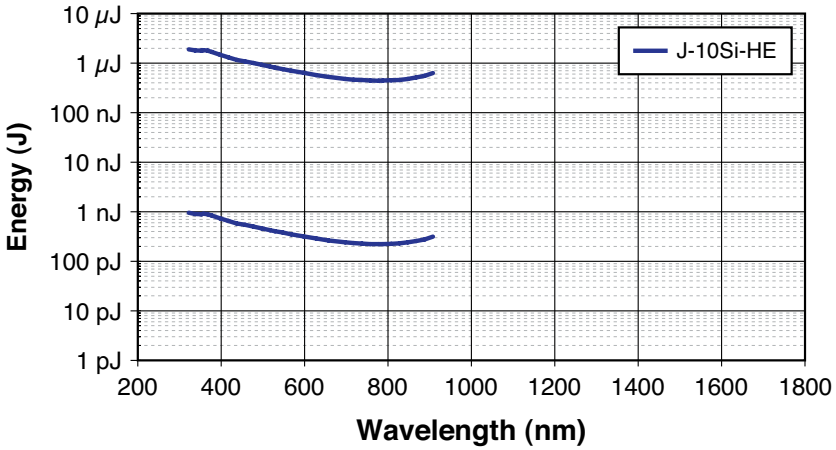

EnergyMax Sensors - Standard DB-25

MaxBlack Coating

J-50MB-HE, J-25MB-HE and J-10MB-HE

Features

- Unique MaxBlack coating increases damage threshold, allows high repetition rate operation, and improves mechanical durability
- Operate over the 190 nm to 12 µm range
- Enable pulse energy measurements from 300 nJ to 2J with high signal-to-noise characteristics
- Measure single shot to 1 kHz repetition rate
- Spectral compensation characteristics built into each unit
- Onboard sensors provide automatic temperature compensation

These sensors allow measurements over a wide range of wavelengths, beam diameters, average power levels, and repetition rates. The MaxBlack coating on these sensors provides significant damage resistance and mechanical durability characteristics compared to the black paint coatings often used on broadband sensors in the past.

Device Specifications

ISO/IEC 17025:2005

Model	J-50MB-HE	J-50MB-LE	J-25MB-HE	J-25MB-LE	J-10MB-HE	J-10MB-LE
Energy Range	1 mJ to 2J	250 µJ to 500 mJ	500 µJ to 1J	25 µJ to 50 mJ	10 µJ to 20 mJ	300 nJ to 600 µJ
Noise Equivalent Energy	<33 µJ	<8 µJ	<16 µJ	<1 µJ	<0.5 µJ	<20 nJ
Wavelength Range (µm)	0.19 to 12					
Active Area Diameter (mm)	50	50	25	25	10	10
Maximum Average Power[1] (W)	10	10	5	5	4	4
Maximum Pulse Width (µs)	57		17			
Maximum Repetition Rate (pps)	300	300	1000	1000	1000	1000
Maximum Energy Density (mJ/cm²)	500 (at 1064 nm, 10 ns)					
Detector Coating	MaxBlack					
Diffuser	No					
Calibration Wavelength (nm)	1064					
Calibration Uncertainty (%)(k=2)	±2					
Energy Linearity (%)	±3					
Cable Length[2] (m)	2.5					
Cable Type	J DB-25					
Part Number	1110573**	1110576**	1110746**	1110743**	1110843**	1110855**

[1] Extend average power range with optional heat sink. See page 100.
[2] Cable lengths up to 10m possible. Contact factory.

** C24 Quick Ship program: eligible for next business day shipment.

J-25MB-HE and -LE

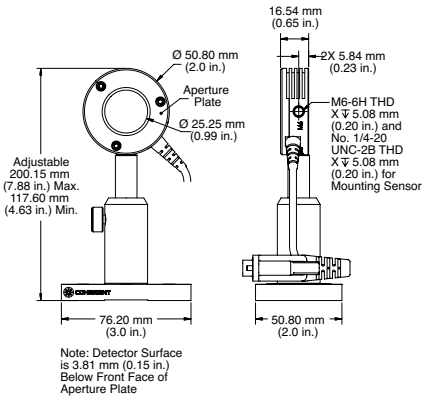

J-50MB-HE and -LE

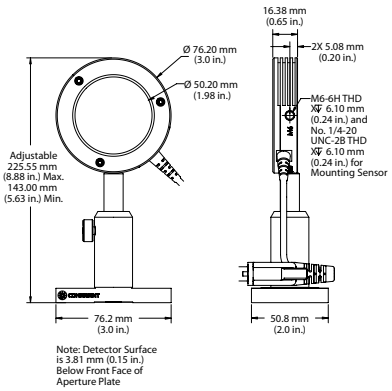

J-10MB-HE and -LE

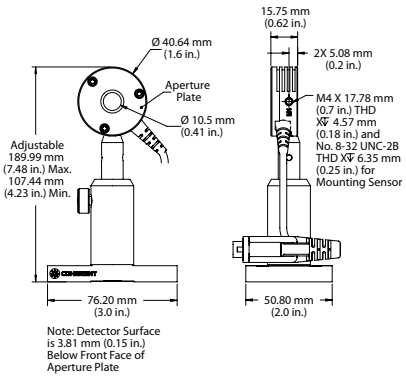

EnergyMax Sensors - Standard DB-25

Diffuse Metallic Coating

POWER & ENERGY
Power & Energy Meters
PowerMax-Pro Sensors
USB/RS Power Sensors
DB-25 Power Sensors
USB/RS Energy Sensors
DB-25 Energy Sensors
Custom & OEM
BEAM DIAGNOSTICS
CALIBRATION & SERVICE
Laser Cross-Reference Index
Model Name Index

J-50MT-10KHZ, J-25MT-10KHZ and J-10MT-10KHZ

Features

- **Unique diffuse metallic coating delivers increased damage threshold, allows high repetition rate operation and reduces specular reflectance**
- **Operate over the entire 190 nm to 2.1 µm range**
- **Enable pulse energy measurements from 100 nJ to 1J with high signal-to-noise characteristics**
- **Measure up to 10 kHz repetition rate**
- **Spectral compensation characteristics built into each unit**
- **Onboard sensors provide automatic temperature compensation[1]**

These sensors incorporate a diffuse metallic coating that enables measurements at high and low repetition rates across a wide range of energies, and wavelengths from 190 nm to 2.1 µm. The damage resistance at 532 nm and shorter wavelengths is higher than the MaxBlack coating. These sensors are not compatible with FieldMaxII meters because the response time is too fast. They are best suited for the LabMax-TOP meter.

Device Specifications

ISO/IEC 17025:2005

AC-1630

Model	J-50MT-10KHZ	J-25MT-10KHZ	J-10MT-10KHZ
Energy Range	500 µJ to 1J[2]	50 µJ to 100 mJ	100 nJ to 200 µJ
Noise Equivalent Energy	<16 µJ	<2 µJ	<10 nJ
Wavelength Range (µm)		0.19 to 2.1	
Active Area Diameter (mm)	50	25	10
Maximum Average Power[3] (W)	20	10	1
Maximum Pulse Width (µs)		1.7	
Maximum Repetition Rate (pps)		10,000	
Maximum Energy Density (mJ/cm²)	500 (at 1064 nm, 10 ns)		50 (at 1064 nm, 10 ns)
Detector Coating		Diffuse Metallic	
Diffuser		No	
Calibration Wavelength (nm)		1064	
Calibration Uncertainty (%)(k=2)		±2	
Energy Linearity (%)		±3	
Cable Length[4] (m)		2.5	
Cable Type		J DB-25	
Part Number	1110574**	1110747**	1110856**

[1] Except J-10MT-10KHZ.
[2] Optional energy range 50 µJ to 100 mJ available.
[3] Extend average power range with optional heat sink. See page 100.
[4] Cable lengths up to 10m possible. Contact factory.

**C24 Quick Ship program: eligible for next business day shipment.

J-50MT-10KHZ

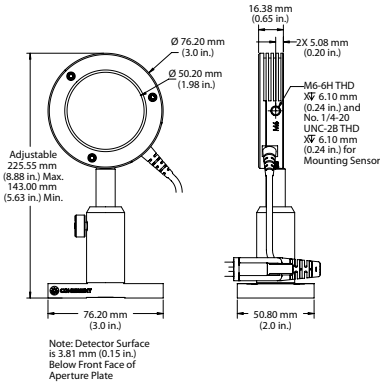

J-25MT-10KHZ

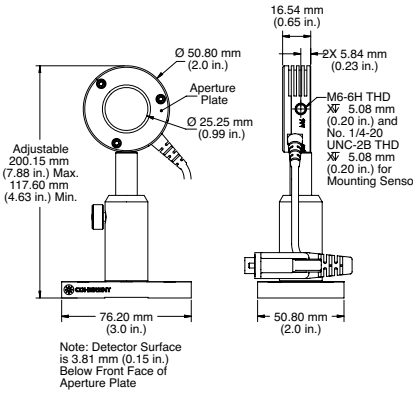

J-10MT-10KHZ

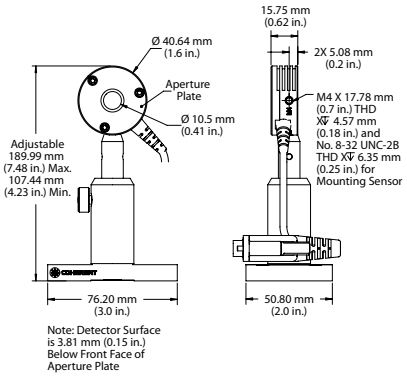

EnergyMax Sensors - Standard DB-25

MaxBlack Coating and Diffusers

J-50MB-YAG

Features

- High energy and peak power to 14 J/cm²
- Operate at Nd: YAG fundamental and harmonics
- Enable pulse energy measurements from 1 mJ to 15J
- Spectral compensation characteristics built into each unit
- Onboard sensors provide automatic temperature compensation

These sensors are specifically designed for high energy and high peak power lasers operating at relatively low repetition rates, such as those based on Nd:YAG, Ruby, Ho:YAG and Erbium. The J-50MB-YAG sensor can be used with beams up to 35 mm in diameter and can work at 1064 nm, 532 nm, 355 nm and 266 nm without the need to change or self-calibrate diffusers or any other accessories. Sensors combine a MaxBlack coating and a diffuser to produce superior damage resistance characteristics. This combination enables operation with lasers that produce either very high energy per pulse or very high peak fluences.

Device Specifications

ISO/IEC 17025:2005

AC-1630

Model	J-50MB-YAG	J-50MB-YAG-1528	J-50MB-YAG-1535	J-50MB-YAG-1561
Energy Range	1.5 mJ to 3J	1.5 mJ to 3J	12 mJ to 15J	50 µJ to 100 mJ
Noise Equivalent Energy (µJ)	<50			
Wavelength Range (µm)	0.266 to 2.1			
Maximum Beam Size (mm)	35			
Maximum Average Power[1] (W)	20			
Maximum Pulse Width	340 µs	57 µs	2 ms[2]	340 µs
Maximum Repetition Rate (pps)	50	300	10	50
Maximum Energy Density (J/cm²)	14.0 (at 1064 nm, 10 ns) 2.8 (at 532 nm, 10 ns) 0.75 (at 355 nm, 10 ns) 1.0 (at 266 nm, 10 ns)			
Detector Coating	MaxBlack			
Diffuser	YAG			
Calibration Wavelength (nm)	1064			
Calibration Uncertainty (%)(k=2)	±2			
Energy Linearity (%)	±3			
Cable Length[3] (m)	2.5			
Cable Type	J DB-25			
Part Number	1110744**	1144701	1151431	1174756

[1] Extend average power range with optional heat sink. See page 100.
[2] Pulsewidths up to 5 ms can be measured with an additional ±1% uncertainty.
[3] Cable lengths up to 10m possible. Contact factory.

** C24 Quick Ship program: eligible for next business day shipment.

J-50MB-YAG

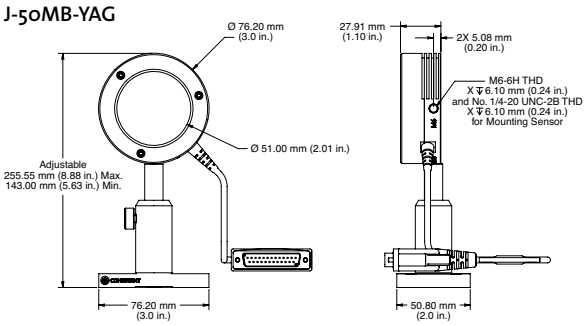

EnergyMax Sensors - Standard DB-25

MaxBlack Coating and Diffusers

POWER & ENERGY
Power & Energy Meters
PowerMax-Pro Sensors
USB/RS Power Sensors
DB-25 Power Sensors
USB/RS Energy Sensors
DB-25 Energy Sensors
Custom & OEM
BEAM DIAGNOSTICS
CALIBRATION & SERVICE
Laser Cross-Reference Index
Model Name Index

J-50MB-IR and J-25MB-IR

Features

- High energy and peak power
- Operate throughout the IR
- Enable pulse energy measurements from 1 mJ to 3J
- Spectral compensation characteristics built into each unit
- Onboard sensors provide automatic temperature compensation

These sensors are specifically designed for high energy and high peak power medical lasers operating at relatively low repetition rates, such as those based on Ruby, Ho:YAG and Erbium. Both sensors combine a MaxBlack coating and a diffuser to produce superior damage resistance characteristics. This combination enables operation with lasers that produce either very high energy per pulse or very high peak fluences.

Device Specifications

ISO/IEC 17025:2005

AC-1630

Model	J-50MB-IR	J-25MB-IR
Energy Range	1.0 mJ to 3J	1.5 mJ to 3J
Noise Equivalent Energy (µJ)	<100	<50
Wavelength Range (µm)	0.5 to 3.0	0.532 to 2.1
Maximum Beam Size (mm)	30	12.5
Maximum Average Power[1] (W)	15	20
Maximum Pulse Width (µs)	1000	860
Maximum Repetition Rate (pps)	30	20
Maximum Energy Density (J/cm²)	>100 (at 2940 nm, 100 µs)	5.0 (at 1064 nm, 10 ns)
Detector Coating	MaxBlack	
Diffuser	IR	
Calibration Wavelength (nm)	1064, 2940	1064
Calibration Uncertainty (%)(k=2)	±2 at 1064 nm, ±3 at 2940 nm	±2
Energy Linearity (%)	±3.5	±3
Cable Length[2] (m)	2.5	
Cable Type	J DB-25	
Part Number	1155722	1110577

[1] Extend average power range with optional heat sink. See page 100.
[2] Cable lengths up to 10m possible. Contact factory.

J-50MB-IR

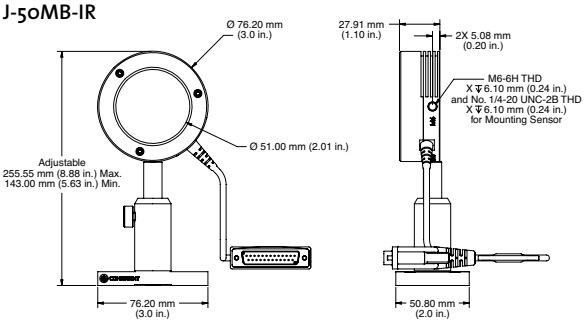

J-25MB-IR

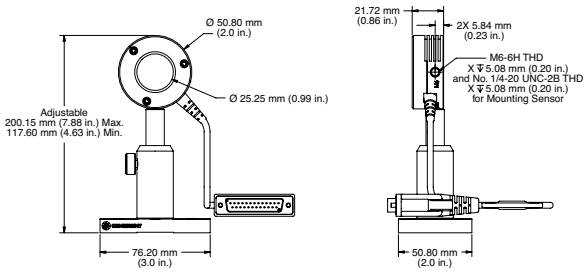

EnergyMax Sensors - Standard DB-25

MaxUV Coating

J-50MUV-248 and J-25MUV-248

Features

- Unique MaxUV coating delivers highest DUV damage threshold and long-term UV exposure resistance
- Operate over the 190 nm to 2.1 µm range
- Enable pulse energy measurements from 50 µJ to 1J
- Measure up to 400 Hz repetition rate
- Spectral compensation characteristics built into each unit
- Onboard sensors provide automatic temperature compensation

MaxUV-coated EnergyMax sensors are specifically optimized for use with ArF lasers operating at 193 nm and KrF lasers at 248 nm. These sensors feature high accuracy and large active areas (up to 50 mm), and use a unique coating called MaxUV that delivers superior long-term damage resistance.

Two of the 50 mm diameter models incorporate a DUV quartz diffuser for increased resistance to coating damage.

Device Specifications

ISO/IEC 17025:2005

AC-1630

Model	J-50MUV-248 w/o Diffuser	J-50MUV-248 w/Diffuser	J-50MUV-193 w/o Diffuser	J-50MUV-193 w/Diffuser	J-25MUV-248 w/o Diffuser	J-25MUV-193 w/o Diffuser
Energy Range	500 µJ to 1J	500 µJ to 1J	125 µJ to 250 mJ	125 µJ to 250 mJ	125 µJ to 250 mJ	50 µJ to 100 mJ
Noise Equivalent Energy (µJ)	<16	<16	<4	<4	<4	<2
Wavelength Range (µm)	0.19 to 2.1	0.19 to 0.266	0.19 to 2.1	0.19 to 0.266	0.19 to 2.1	0.19 to 2.1
Active Area Diameter (mm)	50	50	50	50	25	25
Max. Average Power[1] (W)	10	15	10	18	5	5
Max. Pulse Width (µs)	86	86	86	86	43	43
Max. Rep. Rate (pps)	200	200	200	200	500	500
Max. Energy Density (mJ/cm²)	260 (at 248 nm, 10 ns)	520 (at 248 nm, 10 ns)	200 (at 193 nm, 10 ns)	400 (at 193 nm, 10 ns)	260 (at 248 nm, 10 ns)	200 (at 193 nm, 10 ns)
Detector Coating	MaxUV					
Diffuser	No	DUV	No	DUV	No	No
Calibration Wavelength (nm)	248	248	193	193	248	193
Calibration Uncertainty (%)(k=2)	±3					
Energy Linearity (%)	±3					
Cable Length[2] (m)	2.5					
Cable Type	J DB-25					
Part Number	1146243	1110572**	1146237	1110575	1110745**	1110741

[1] Extend average power range with optional heat sink. See page 100.
[2] Cable lengths up to 10m possible. Contact factory.
** C24 Quick Ship program: eligible for next business day shipment.

J-50MUV-248 and -193

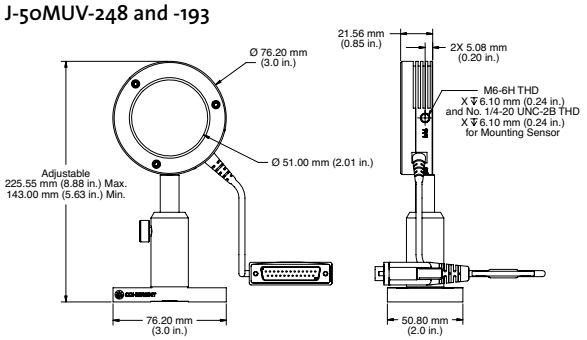

J-25MUV-248 and -193

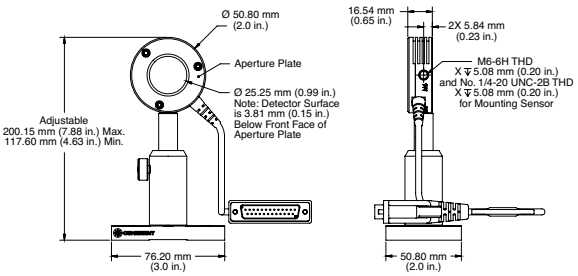

EnergyMax Sensors - Standard DB-25

Quantum Series

POWER & ENERGY
Power & Energy Meters
PowerMax-Pro Sensors
USB/RS Power Sensors
DB-25 Power Sensors
USB/RS Energy Sensors
DB-25 Energy Sensors
Custom & OEM
BEAM DIAGNOSTICS
CALIBRATION & SERVICE
Laser Cross-Reference Index
Model Name Index

J-10SI-LE

Features

- **Pulse enegy measurement down to 8 pJ (within line; model dependent)**
- **Average power measurement of pulsed sources from nW to mW level signal-to-noise characteristics**
- **Measures single pulses to 10,000 Hz**
- **Accurate spectral compensation**
  - 325 nm to 900 nm for Silicon
  - 800 nm to 1700 nm for Germanium
- **Robust and reliable construction**

Quantum EnergyMax sensors enable low energy pulse measurements down to the 8 pJ level , as well as average power of pulsed systems from the nW to mW level, across a broad range of wavelengths. These models are not compatible with FieldMaxII meters because the response time is too fast. They are best suited for the LabMax-TOP meter. These sensors have a removable light shield on the front used to block stray light.

Device Specifications

Model	J-10SI-LE	J-10SI-HE	J-10GE
Energy Range	8 pJ to 80 nJ (at 532 nm)	60 pJ to 775 nJ (at 532 nm)	200 pJ to 600 nJ (at 1064 nm)
Noise Equivalent Energy	<0.8 pJ (at 532 nm)	<6 pJ (at 532 nm)	<8 pJ (at 1064 nm)
Wavelength Range (nm)	325 to 900	325 to 900	800 to 1700
Active Area Diameter (mm)	10	10	10
Max. Avg. Power (mW)	6	60	15
Max. Pulse Width (µs)	1	1	1
Max. Rep. Rate (pps)	10,000	10,000	10,000
Sensor	Silicon	Silicon	Germanium
Diffuser	ND2	ND2	ND2
Calibration Wavelength (nm)	532	532	1064
Calibration Uncertainty (%)(k=2)	±3	±3	±3
Linearity (%)	±3	±3	±3
Cable Length (m)[1]	3	3	3
Cable Type	J DB-25	J DB-25	J DB-25
Part Number	1140727	1150146	1140408

[1] Cable lengths up to 10m possible. Contact factory.

J-10SI-LE and -HE/J10GE

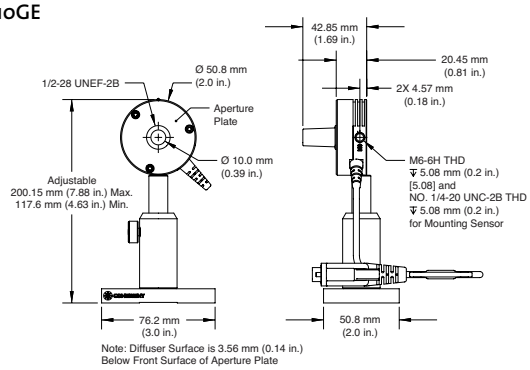

EnergyMax Sensors - Standard DB-25

Quantum Series

The Quantum EnergyMax series consists of three different models that provide very low pulse energy measurement down to 20 pJ. Two of the models (J-10SI-LE and J-10SI-HE) incorporate a Silicon photodiode, and one model (J-10GE) incorporates a Germanium photodiode. All three models contain large 10 mm clear apertures and operate at repetition rates from single pulse up to 10 kHz.

The main difference between Quantum EnergyMax sensors and other Coherent EnergyMax sensors is their sensitivity. Quantum EnergyMax sensors are capable of measuring considerably smaller signals than the rest of the EnergyMax sensor line. They do this by utilizing a photodiode—rather than a pyroelectric—element.

Due to the quantum nature of their response, photodiode sensors are inherently more sensitive than pyroelectric sensors, which are thermal-based. One consequence of this extra sensitivity is the possibility of measurement error or noise from stray modulated light sources (for example, stray reflections or room lights) in a laboratory environment. For this reason Quantum EnergyMax sensors are designed for use with a small integrated input beam tube, which limits the field of view of the sensor aperture. This tube is removable for alignment purposes and custom applications.

The following chart plots the minimum and maximum measurable energy of each sensor across all wavelengths. This chart can be used to determine the measurable energy range for wavelengths other than those in the specifications table (1064 nm and 532 nm).

LabMax-TOP and J-10SI-LE

Spectral Sensitivity Curves for Quantum EnergyMax Sensors

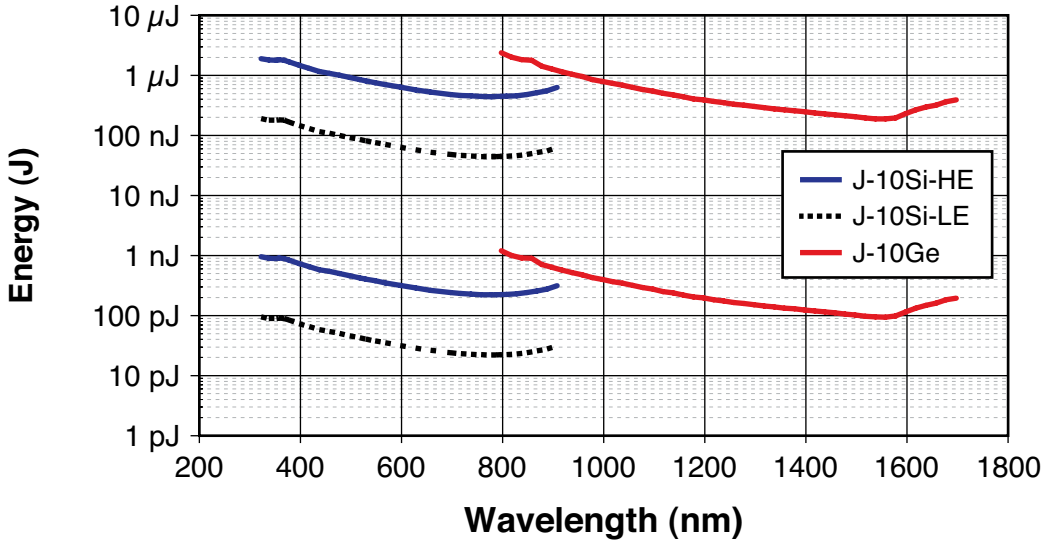

EnergyMax Accessories

Heat Sinks

POWER & ENERGY
Power & Energy Meters
PowerMax-Pro Sensors
USB/RS Power Sensors
DB-25 Power Sensors
USB/RS Energy Sensors
DB-25 Energy Sensors
Custom & OEM
BEAM DIAGNOSTICS
CALIBRATION & SERVICE
Laser Cross-Reference Index
Model Name Index

EnergyMax Heat Sinks

Features

- Extend EnergyMax average power
- Easily attach to EnergyMax sensors in the field
- Two heat sinks for 25 mm sensors (small and medium)
- One heat sink for 50 mm sensors (large)

These heat sink accessories can be used to extend the energy and repetition rates of EnergyMax sensors by increasing the average power capability. Easily installed, they are simply theaded onto the back of a sensor housing with a cap screw retained within the heat sink.

See Average Power Capability table on page 81 for sensor specifications.

Small Heat Sink

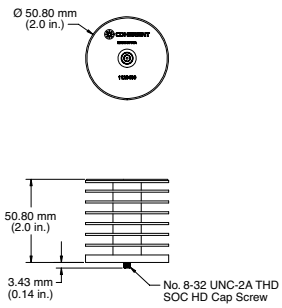

Medium Heat Sink

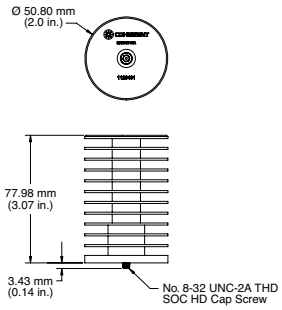

Large Heat Sink

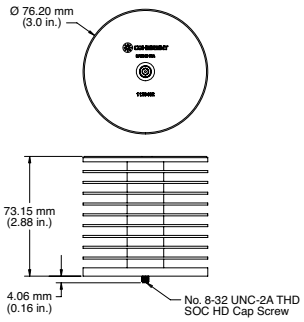

Part Number	Description
1123430	Small Heat Sink
1123431	Medium Heat Sink
1123432	Large Heat Sink

Post and Stand

2-inch and 3-inch Post/Stand Assembly

Part Number	Description
1136565	2-inch Height Post/Stand Assembly
1136566	3-inch Height Post/Stand Assembly (ships with all EnergyMax Sensors)

EnergyMax Accessories

J-Power Pro Energy Sensor DB-25-to-BNC Adapter

J-Power Pro Sensor Adapter

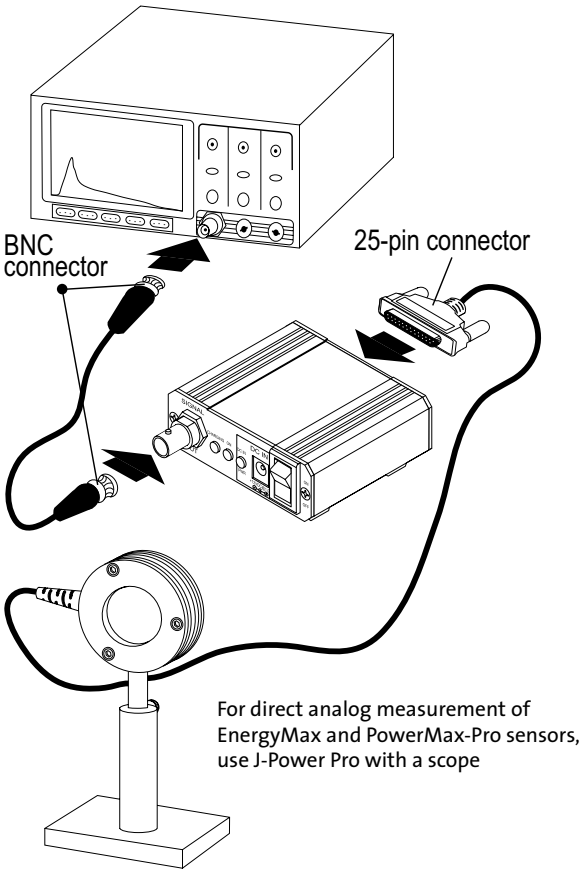

The J-Power Pro is a compact sensor adapter that powers the active sensor circuit in DB-25 EnergyMax and PowerMax-Pro sensors and passes the raw output voltage of the sensor directly to the BNC connector. The peak voltage of the output (as referenced from baseline voltage) can then be measured using an oscilloscope or other analog-to-digital input device. The calibrated peak voltage represents the integrated energy of the laser pulse.

Part Number	Description
1273690	J-Power Pro Energy Sensor Adapter

Pyroelectric Sensor Test Slides

Test Slides

For protection of your sensor when measuring unknown beams, the test slide is inserted into the beam and then examined for damage. These test slides are coated with the same absorbing coating as the pyroelectric sensors. If coating damage is visible, then attenuation is required before measuring the beam.

Part Number	Description
0011-4311	Pyroelectric Test Slide – Black Coating (used with legacy sensors)
1171292	Pyroelectric Test Slide – Diffuse Metallic Coating
0011-4313	Pyroelectric Test Slide – MUV Coating
0011-4314	Pyroelectric Test Slide – MB Coating

EnergyMax - Laser Energy Sensors

Measuring Energy with an Oscilloscope

POWER & ENERGY
Power & Energy Meters
PowerMax-Pro Sensors
USB/RS Power Sensors
DB-25 Power Sensors
USB/RS Energy Sensors
DB-25 Energy Sensors
Custom & OEM
BEAM DIAGNOSTICS
CALIBRATION & SERVICE
Laser Cross-Reference Index
Model Name Index

To measure the energy of very high repetition rate and/or low-energy lasers, an oscilloscope can be used to monitor the output of an EnergyMax sensor.

This page presents a step-by-step procedure for setting up an oscilloscope and using a pyroelectric EnergyMax sensor to accurately read a peak voltage output.

1. To assure the accuracy of a pulse energy measurement, make sure the oscilloscope is calibrated properly. Also check the date for when the oscilloscope is due for recalibration.

2. Select a scope that has a sensitivity of at least 2 mV and a bandwidth of at least 20 MHz.

3. To connect an EnergyMax sensor to an oscilloscope you will need a J-Power Pro DB25-to-BNC accessory (available from Coherent).

4. Use the 1 Mohm input impedance of the oscilloscope when connecting any EnergyMax sensor.

5. Set up the scope as follows:
   - Bandwidth to 20 MHz
   - DC coupling
   - Trigger on "+" slope and "internal" source, or use the laser sync output and "external" source

6. Estimate the approximate EnergyMax sensor voltage output expected, based on the Rv (V/J) of the sensor (available on both the calibration certificate and the calibration sticker attached to the sensor cable), and the typical laser pulse energy.

7. If you know your expected laser pulse repetition rate, set the scope time base to show 2 pulses on the screen. This helps set the trigger and allows observation of the true "baseline" of the pulse. For example, for a laser running at 10 pps, set the scope time base to 20 msec/division. Once proper triggering occurs, use the vertical adjust to set the baseline of the EnergyMax voltage pulse to coincide with a horizontal grid line (see Figure 1). This setting becomes the zero for the peak voltage reading.

8. Adjust the "time base" of the scope to show a single EnergyMax pulse and then focus on the leading edge to accurately read the peak voltage (see Figure 2).

To avoid affecting the calibration of the sensor with a coaxial cable do not lengthen the cable when using the sensor with the oscilloscope.

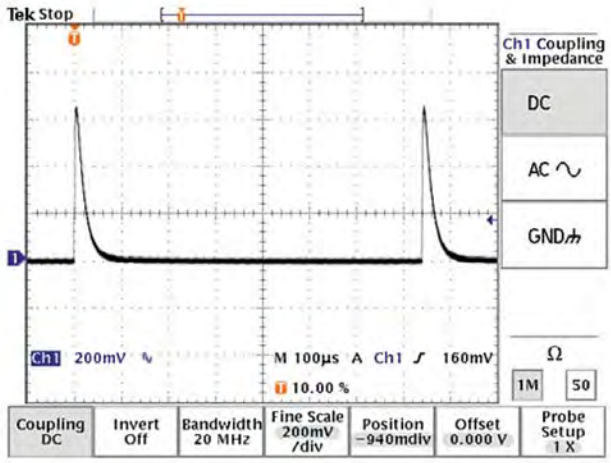

Figure 1

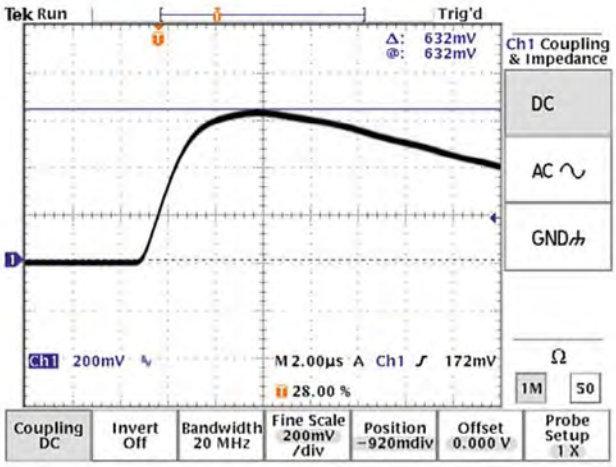

Figure 2

Miscellaneous Energy Sensors

J100 Energy Sensor

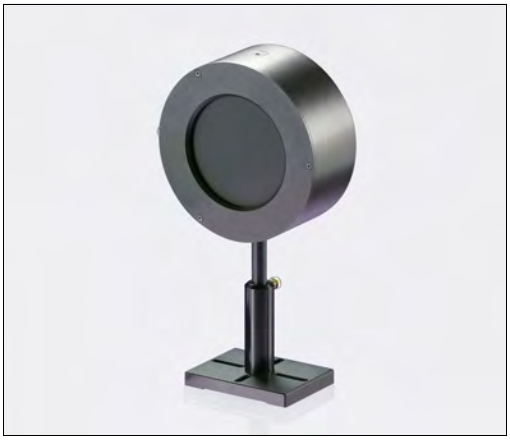

J100

Features

- Large area 95 mm diameter
- Broad spectral response 0.3 µm to 12 µm
- Wide dynamic range of 0.4 mJ to 5J
- High average power to 20W
- JSA-BNC adapter (1098306) needed for use with FieldMaxII-TOP and LabMax-TOP

The J100 is a pyroelectric energy sensor with a flat, broad spectral response calibrated at 1064 nm. The 95 mm diameter active area is ideal for divergent sources and pulsed lasers used in applications such as laser range finding. The sensor output is through a BNC connector and the product ships with a 1.5 m BNC cable and a JSA-BNC adapter to enable it to be used with our power and energy meters.

Device Specifications

ISO/IEC 17025:2005

Model	J100
Wavelength Range (µm)	0.3 to 12
Energy Range[1]	0.4 mJ to 5J
Max. Avg. Power	20
Typical Response (Rv) (V/J)	3
Max. Rep. Rate (pps)	50
Max. Pulse Width (µs)	200
Detector Coating	Black
Detector Diameter (mm)	95
Dimensions (mm)	Ø 153 x 65
Calibration Uncertainty (%)(k=2)	±2
Calibration Wavelength (nm)	1064
Connector Type	BNC
Cable Length (m)	1.5 (separate)
Part Number	1098424

[1] Maximum energy is pulse-width dependent.

J100

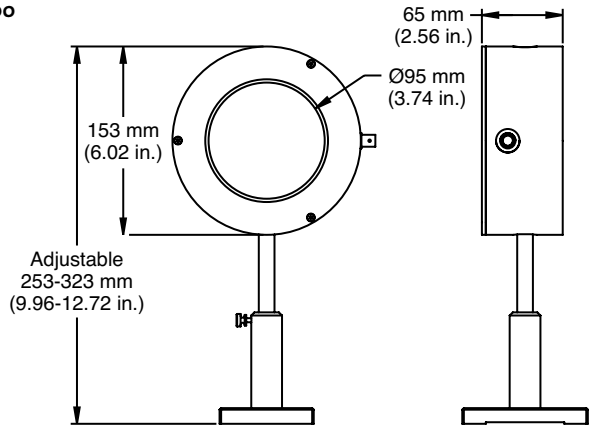

Front View Side View

POWER & ENERGY
Power & Energy Meters
PowerMax-Pro Sensors
USB/RS Power Sensors
DB-25 Power Sensors
USB/RS Energy Sensors
DB-25 Energy Sensors
Custom & OEM
BEAM DIAGNOSTICS
CALIBRATION & SERVICE
Laser Cross-Reference Index
Model Name Index

Custom and OEM Products Introduction

Complete Laser Measurement and Control Solutions

POWER & ENERGY
Power & Energy Meters
PowerMax-Pro Sensors
USB/RS Power Sensors
DB-25 Power Sensors
USB/RS Energy Sensors
DB-25 Energy Sensors
Custom & OEM
BEAM DIAGNOSTICS
CALIBRATION & SERVICE
Laser Cross-Reference Index
Model Name Index

Laser system integrators frequently include laser measurement products in their systems to monitor system performance and status, or to provide real-time feedback for laser system control. In these instances custom measurement solutions or modifications to our existing products may be necessary due to size or performance constraints.

Coherent is well positioned to provide custom and modified measurement products. Following are some examples of services and products Coherent offers.

OEM Power and Energy Sensors
We provide an extensive line of OEM thermopile and energy sensors. Usually, a standard or existing modified standard product will fit your application.

Power Sensors
- Compact thermopile power sensors
- Water-cooled and air-cooled options
- BNC and 4-pin Molex signal output options
- Thermopile disks for integrating into heat-sinked applications
- Any standard thermopile with a cable can be integrated with an off-the-shelf interface module

Energy Sensors
- BNC-terminated energy sensors
- Compact designs to fit in tight locations
- A customer-supplied peak detection module or a Coherent meter or custom signal conditioning board is required

Off-the-Shelf Interface Modules
Several off-the-shelf electronic modules provide signal conditioning, measurement, and communication outputs.

Power Modules
- Amplification for very low power applications
- Noise filtering
- Analog output
- PC interfacing
- Beam position monitoring

Energy Modules
- Baseline and peak detection capabilities
- Noise filtering for greater peak detection accuracy
- Repetition rates as high as 100 kHz

Custom Measurement Products
Sometimes a completely custom product is required for a particular application. Our research and development teams of electrical, mechanical and software engineers, physicists, chemists and materials scientists can provide measurement systems to meet the most complex challenges. By involving Coherent early in your design phase we can provide the very best solution.

- Custom detectors and sensors
- Interface modules with unique communication protocols
- Extremely low energy and/or high repetition rate energy measurement

Modified Standard Products
Sometimes a slight modification to a standard catalog product is all that is needed to enable a special application.

Mechanical
- Longer or shorter cable
- Different type of connector
- Slight mechanical change

Calibration
- Different calibration wavelength

OEM Thermopiles

10 mW to 150W

PM10-19A, PM10-19B and PM150-50A

Features

- **10 mW to 150W**
- **Spectrally flat from 0.19 µm to 11 µm**
- **Compact designs**
- **Air-cooled or water-cooled**
- **Active area diameters from 19 mm to 50 mm**

The sensors on the next two pages are small, compact OEM thermopiles designed for use in embedded applications. Power ratings are provided for water-cooled and air-cooled installations (see page 22 for additional air-cooled ratings for various exposure times). For conductively-cooled installations a good approximation is that doubling the surface area of the sensor housing doubles the air-cooled rating.

Models that end with "A" are amplified sensors with a 4-pin connector. They must be supplied with ±15 VDC and draw less than 20 mA. Models that end with "B" are passive sensors with a BNC output. Models with DB25 cables that are compatible with our instruments end with a "C" and can be found on pages 66, 67, and 73.

Device Specifications

ISO/IEC 17025:2005

Model	PM10-19A	PM10-19B	PM150-19A	PM150-19B	PM150-50A
Wavelength Range (µm)	0.19 to 11				
Resolution (mW)	1	1	30	30	30
Min. Water flow (gpm)	0.02	0.02	0.2	0.2	0.2
Max. Avg. Power (water-cooled) (W)	10		150		
Max. Avg. Power (air-cooled, 5 min.) (W)	5		20		80
Responsivity (typ.)	1 V/W	1 mV/W	40 mV/W	0.4 mV/W	40 mV/W
Max. Power Density	6 kW/cm²				
Max. Energy Density	0.6 J/cm², 1064 nm, 10 ns				
Response Time (sec.)	1	2	1	2	1
Detector Coating	Broadband				
Active Area Diameter (mm)	19				
Calibration Uncertainty (%)(k=2)	±1				
Calibration Wavelength (nm)	514				
Cooling Method	Water-cooled				
Connector Type	4-pin Molex 22-12-2044	BNC-terminated	4-pin Molex 22-12-2044	BNC-terminated	4-pin Molex 22-12-2044
Cable Length (m)	–	–	–	–	–
Part Number (RoHS)	1098334	1098343	1098418	1098321	1098510

PM10-19A/PM150-19A

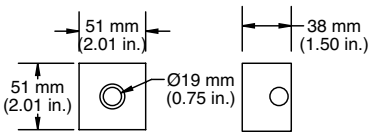

PM10-19B/PM150-19B

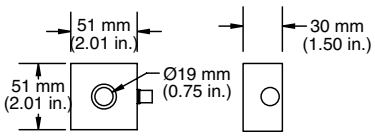

PM150-50A

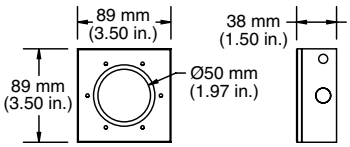

OEM Thermopiles

300 mW to 1 kW

POWER & ENERGY
Power & Energy Meters
PowerMax-Pro Sensors
USB/RS Power Sensors
DB-25 Power Sensors
USB/RS Energy Sensors
DB-25 Energy Sensors
Custom & OEM
BEAM DIAGNOSTICS
CALIBRATION & SERVICE
Laser Cross-Reference Index
Model Name Index

PM150-50B, PM150-50XB, PM1K-36B and BeamFinder

Features

- 300 mW to 1 kW
- Spectrally flat from 0.19 µm to 11 µm
- Compact designs
- Air-cooled or water-cooled
- Active area diameters from 19 mm to 50 mm
- Supplied with water fittings

BeamFinder: Use with LabMax (see pages 10-13)

Device Specifications

ISO/IEC 17025:2005

Model	PM150-50B	PM150-50XB	PM1K-36B	BeamFinder[1]
Wavelength Range (µm)	0.19 to 11	0.15 to 1	0.19 to 11	0.3 to 10.6
Resolution (mW)	30	30	1000	1000
Min. Water flow (gpm)	0.2	0.2	1.0	1.0
Max. Avg. Power (water-cooled) (W)	150		1000	
Max. Avg. Power (air-cooled, 5 min.) (W)	80		40	–
Responsivity (typ.)	0.4 mV/W		0.1 mV/W	–
Max. Power Density	6 kW/cm²		2.5 kW/cm²	
Max. Energy Density	0.6 J/cm², 1064 nm, 10 ns			0.5 J/cm², 1064 nm, 10 ns
Response Time (sec.)	5			10
Detector Coating	Broadband	UV	Broadband	H
Active Area Diameter (mm)	50		36	35
Calibration Uncertainty (%)(k=2)	±1		±3	±5
Calibration Wavelength (nm)	514		1070	10,600
Cooling Method	Water-cooled			
Connector Type	BNC-terminated			LM DB-25
Cable Length (m)	–	–	–	6
Part Number (RoHS)	1098415	1098441	1098333	1098427

[1] BeamFinder incorporates a quadrant thermopile disk that enables the position of the beam to be sensed.

PM150-50B/PM150-50XB

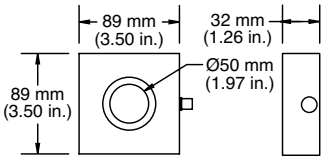

PM1K-36B

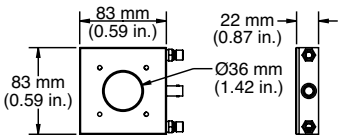

BeamFinder

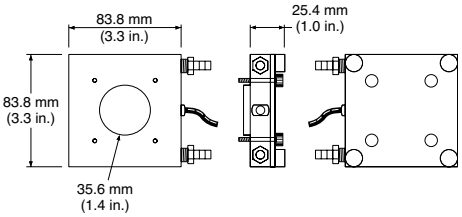

Custom and OEM Products

Complete Laser Measurement and Control Solutions

Additional electrical connection, water fitting, and mounting details for several of our OEM thermopiles can be found below.

PM10-19A, PM150-19A, PM150-50A
Style: Active amplified output
Input/Output connector: 4-pin, Molex part no. 22-12-2044
pin 1: -10 to -20V power input
pin 2: Ground
pin 3: +10 to +20V power input
pin 4: Output signal
Current draw: Approx. 8 mA at -15 V, Approx. 18 mA at +15 V
Output impedance: 100 Ohm
Water connections: 1/8 NPT

PM10-19B, PM150-19B, PM150-50B, PM150-50XB, PM1K-36B
Style: Passive output
Output connector: BNC
Output impedance: 2500 Ohm
Water connections: 1/8 NPT

PM10-19A/ PM150-19A

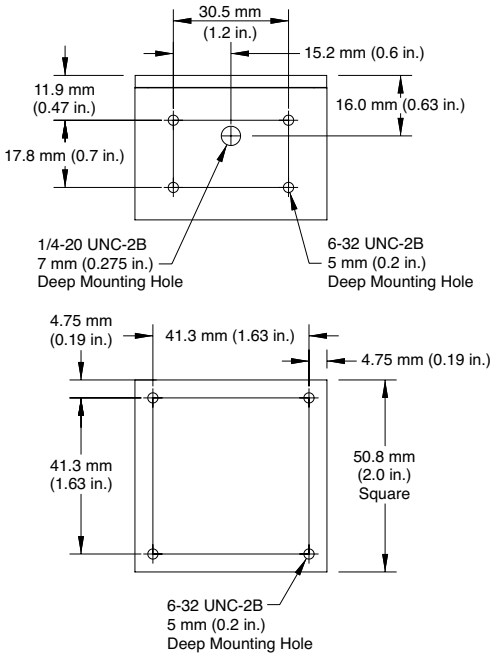

PM10-19B/ PM150-19B

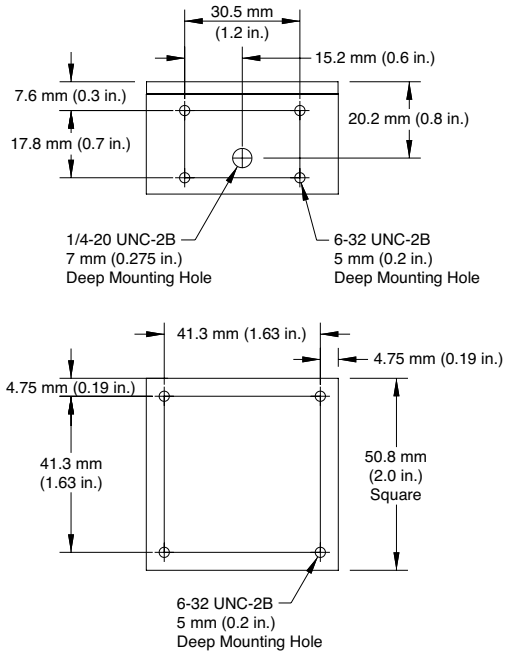

PM150-50A

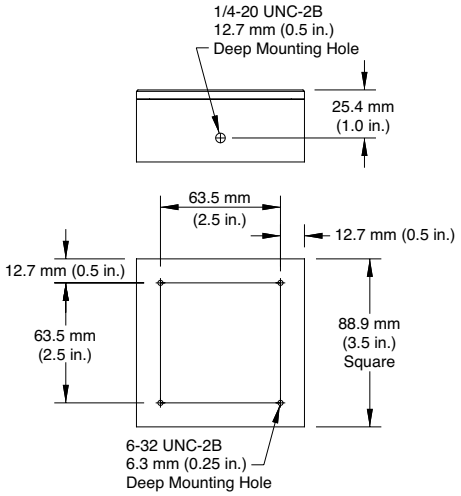

PM150-50B/ PM150-50XB

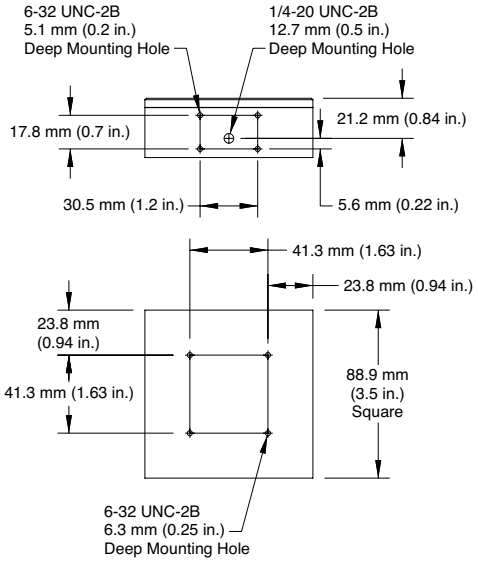

* Requires 15 VDC power input

Beam Diagnostics Introduction

Introduction to Laser Beam Diagnostics

POWER & ENERGY
Power & Energy Meters
PowerMax-Pro Sensors
USB/RS Power Sensors
DB-25 Power Sensors
USB/RS Energy Sensors
DB-25 Energy Sensors
Custom & OEM
BEAM DIAGNOSTICS
CALIBRATION & SERVICE
Laser Cross-Reference Index
Model Name Index

In today's fast-paced photonics market it is important to understand the technical specifications of highly complex laser systems and their applications. As well as analyzing the power or energy, it is also useful to understand the shape and intensity profile of a laser beam. For over 25 years Coherent has developed precision instruments that measure, characterize, and monitor these laser parameters for thousand of customers around the world.

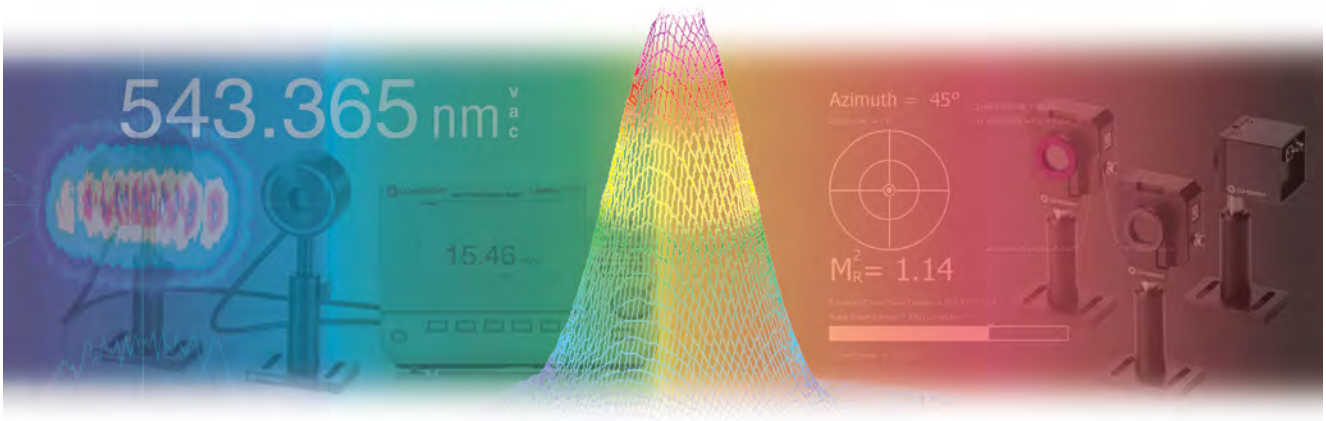

Beam Profilers

As a laser beam propagates, changes in the laser cavity, as well as changes in divergence and interactions with optical elements, cause the width and spatial intensity of the beam to change in space and time. Spatial intensity distribution is a fundamental parameter for indicating how a laser beam will behave in any application. And while theory can sometimes predict the behavior of a beam, tolerance ranges in mirrors and lenses, as well as ambient conditions affecting the laser cavity and beam delivery system, necessitate verification.

Two types of beam profilers are available: those that use special cameras as the beam detectors (these are excellent for fast and detailed analyses of the intensity profile of pulsed and CW lasers); and systems that use moving knife-edges (these have a large dynamic range and can accurately measure small and focused beams). Coherent has both of these types available: the camera-based LaserCam-HR on pages 109 to 111 and an advanced knife-edge system—BeamMaster—on pages 121 to 123.

Summary of Product Primary Measurement Capabilities

Model	BeamView Analyzer	BeamMaster
Wavelength	–	–
Power	–	CW
Beam Position	CW + Pulsed	CW
Propagation M^2	–	–
Beam Profiles		
2D	CW + Pulsed	CW
3D	CW + Pulsed	CW
Page Number	112	121

LaserCam-HR II

Introduction to Camera-Based Beam Diagnostics

Coherent BeamView Analyzer systems are the recognized leader in software, hardware and optical components for laser beam analysis. Constant product improvement based on customer feedback, and innovation from beam analysis experts, have made BeamView Analyzer products the first choice for laboratory, factory and field measurements.

The key elements of a typical camera-based beam profiling system are the camera itself, Coherent Beamview analysis software running on an appropriate computer and, when necessary, beam attenuation optics. The key choice to make is matching the appropriate camera technology to your application.

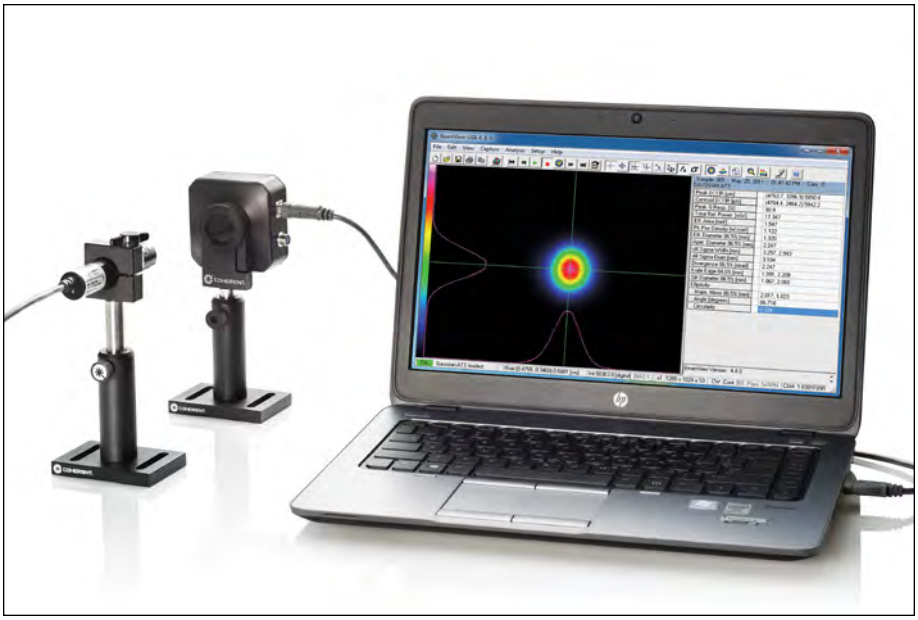

Coherent beam diagnostic cameras are specifically designed or modified for laser analysis. They provide low noise, maximum linearity, and uniformity of response—needed for maximum measurement accuracy. All of these diagnostic cameras accept C-Mount optical accessories and are delivered without a cover (glass/plastic window) over the sensor array. Instead, a LDFP (Low-Distortion Face Plate) filter is supplied with each camera—a laser-grade neutral density filter made of glass specified and polished specifically for laser diagnostic analysis. The LDFP filter is mounted in a standard C-Mount ring and provides attenuation of ambient room light so that the camera can be used with normal room lights.

USB 2.0 Beam Diagnostic Camera Family

Coherent pioneered the ease-of-use of digital USB 2.0 bus-powered, high-resolution, large area cameras requiring only a single cable for both video transfer and camera power. The LaserCam-HR family of beam diagnostic cameras includes the LaserCam-HR II CCD cameras, the LaserCam-HR-UV and the LaserCam-HR-InGaAs models, covering the measurement spectrum from the deep ultraviolet to the near-infrared wavelengths.

With a broad spectral range covering 190 nm to 1700 nm, there is a LaserCam-HR camera profiler system ideally suited for nearly any demanding laser measurement application including scientific, excimer lasers, telecommunications sources, and military laser systems.

Important Considerations

- Ease-of-use connectivity
  - High-speed USB 2.0 Interface
  - USB bus-powered low voltage operation
- Broad spectral range
  - LaserCam-HR II — 190 nm to 1100 nm (400 to 1100 nm with LDFP) (190 to 355 nm with BIP-12F)
  - LaserCam-HR II-UV — DUV to 355 nm
  - LaserCam-HR-InGaAs — 900 nm to 1700 nm
- Large dynamic range
- Digital output through USB 2.0 eliminates the need for an interface card (frame-grabber)
- High-accuracy beam diameter calculations
- Excellent beam spatial uniformity
- Variable camera exposure time
- Compact size
- High-speed image capture rates (15 to 25 frames per second)
- Pass/Fail TTL level output
- RS-232 and TCP/IP communication protocols
- All LaserCam-HR camera systems are RoHS compliant

Multiple channel camera support of different LaserCam-HR camera models is available for all three LaserCam-HR camera types (UV, visible, and InGaAs).

Variable camera exposure time available with the entire LaserCam-HR camera family allows imaging of higher repetition rate sources and lets the user decrease/increase the signal intensity levels using exposure time instead of external attenuation. This feature is especially suited for the LaserCam-HR-InGaAs, with its impressive spatial uniformity characteristics.

Beam Diagnostic Cameras

LaserCam-HR II and LaserCam-HR II UV

POWER & ENERGY
Power & Energy Meters
PowerMax-Pro Sensors
USB/RS Power Sensors
DB-25 Power Sensors
USB/RS Energy Sensors
DB-25 Energy Sensors
Custom & OEM
BEAM DIAGNOSTICS
CALIBRATION & SERVICE
Laser Cross-Reference Index
Model Name Index

LaserCam-HR II

LaserCam-HR II UV

Features

- USB 2.0, 12-bit and 14-bit digital output
- Large-area arrays
- Compact 68 x 68 x 43 mm package
- Metric and English mounts included
- CW and pulsed operation including external triggering
- Variable exposure time
- User-variable trigger delay
- C-mount thread for additional accessories

Device Specifications

** C24

Model	LaserCam-HR II 1/2-inch	LaserCam-HR II 2/3-inch	LaserCam-HR II UV 2/3-inch
Sensor Elements (pixels)		1280 x 1024	
Effective Pixel Resolution (µm)	n/a	n/a	20 x 20
Pixel Size (µm)	4.6 x 4.6	6.5 x 6.5	n/a
Sensor Active Area (mm)(H x V)	5.9 x 4.8	8.3 x 6.6	8.3 x 6.6
Camera Bit Depth	12-bit	14-bit	14-bit
Spectral Range (nm)			
without LDFP	190 to 1100[1]	190 to 1100[1]	190 to 355
with LDFP included	400 to 1100	400 to 1100	
with BIP-12F accessory	190 to 355	190 to 355	
Recommended Beam Diameters (mm)	0.15 to 4.0[2]	0.2 to 6.0[2]	0.5 to 6.0
Capture Modes		Continuous (CW), pulsed	
Variable Exposure Time	1 msec to 500 msec, default at 5 msec	1 msec to 500 msec, default at 5 msec	1 msec to 500 msec, default at 5 msec
Trigger Delay (µs)	75	20	20
Maximum Pulse Trigger in Rate[3] (Hz)	200	200	200
Damage Threshold			
without LDFP	32 mJ/cm² at 1064 nm	32 mJ/cm² at 1064 nm	200 µJ/cm² at 1064 nm[4]
CW Saturation			
with LDFP	13 mW/cm² at 633 nm	5 mW/cm² at 633 nm	90 mW/cm² at 248 nm[5]
without LDFP	5 µW/cm² at 633 nm	2 µW/cm² at 633 nm	90 µW/cm² at 248 nm[4]
with LDFP	70 mW/cm² at 1064 nm	25 mW/cm² at 1064 nm	
without LDFP	340 µW/cm² at 1064 nm	125 µW/cm² at 1064 nm	
Pulsed Saturation			
with LDFP	0.4 mJ/cm² at 1064 nm	0.15 mJ/cm² at 1064 nm	5 mJ/cm² at 248 nm[5]
without LDFP	2 µJ/cm² at 1064 nm	0.7 µJ/cm² at 1064 nm	5 µJ/cm² at 248 nm[4]
USB 2.0 Cable		10 ft. standard A/B cable included	
Trigger		Connector BNC receptacle (trigger cable included)	
Part Number	1282868**	1282870**	1360550

[1] There is a risk of degradation in the range of 190 nm to 300 nm due to DUV exposure. The optional BIP-12F (page 120) UV-to-visible fluorescence converter can be used to prevent drift.
[2] It is possible to measure beams <0.2 mm in diameter, but resolution is reduced.
[3] Without averaging adjacent pulses.
[4] Without LDFP-UV.
[5] With LDFP-UV.
** C24 Quick Ship program: eligible for next business day shipment.

LaserCam-HR II

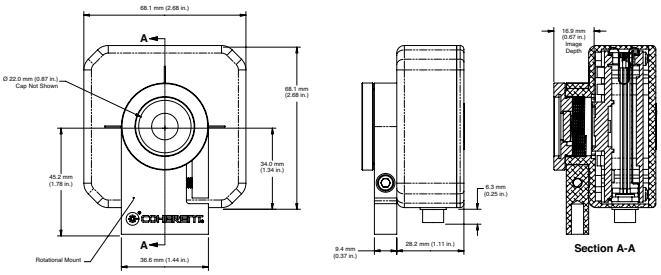

LaserCam-HR II UV

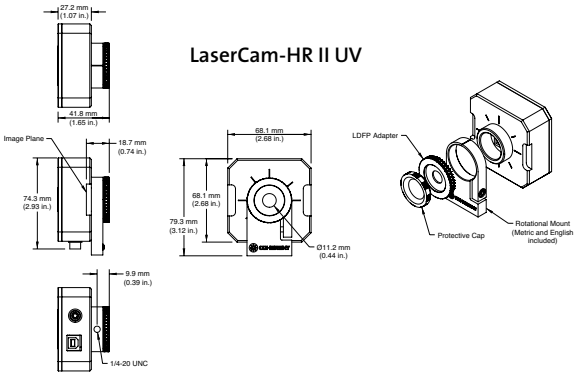

Beam Diagnostic Cameras

LaserCam-HR-InGaAs

LaserCam-HR-InGaAs

Features

- USB 2.0 large area, InGaAs sensor, 9.6 mm x 7.7 mm
- 14-bit digital output providing >1000:1 optical dynamic range
- Outstanding linearity error of <1%
- 30 µm x 30 µm pixel pitch
- Compact 50 x 50 x 68 mm package
- CW and pulsed operation including external triggering
- Coherent Adaptive Pixel Technology (CAPT) pixel-by-pixel offset, linearity and blemish correction
- Variable exposure time, 20 µsec to 25 msec
- User variable trigger delay
- C-mount thread for additional accessories

Device Specifications

Model	LaserCam-HR-InGaAs
Sensor Elements (pixels)	320 x 256
Pixel Size (µm)	30 x 30
Sensor Active Area (mm)(H x V)	9.6 x 7.7
Spectral Range (nm)	900 to 1700
Beam Diameters (mm)	0.5 to 6.0
Glassless Sensor	Low Distortion Face Plate is removable
Low-Distortion Face Plate (LDFP)	Laser-grade ND filter, OD = 2.5 at 632.8 nm
Electrical Interface	USB 2.0
Capture Modes	Continuous (CW), pulsed
Variable Exposure Time	20 µsec to 25 msec, default at 1 msec
Pulsed Mode Trigger Methods	Trigger In (TTL)
Maximum Frame Rate (FPS)	25 (live video, no calculations), 15 (capture with calculations)
Saturation	
CW (at 1064 nm)	3.5 mW/cm² (with LDFP), 50 µW/cm² (without LDFP)
CW (at 1523 nm)	350 µW/cm² (with LDFP), 30 µW/cm² (without LDFP)
Pulse (at 1064 nm)	5 µJ/cm² (with LDFP), 0.08 µJ/cm² (without LDFP)
USB 2.0 Cable	6 ft. standard A/B cable included
Trigger Connector	BNC receptacle (trigger cable included)
Part Number	1149002

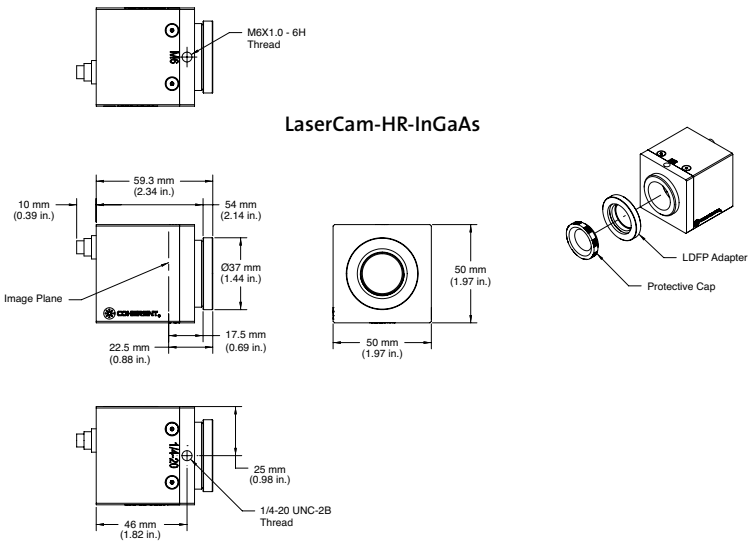

BeamView Analyzer Software

Introduction to BeamView-USB Software

POWER & ENERGY
Power & Energy Meters
PowerMax-Pro Sensors
USB/RS Power Sensors
DB-25 Power Sensors
USB/RS Energy Sensors
DB-25 Energy Sensors
Custom & OEM
BEAM DIAGNOSTICS
CALIBRATION & SERVICE
Laser Cross-Reference Index
Model Name Index

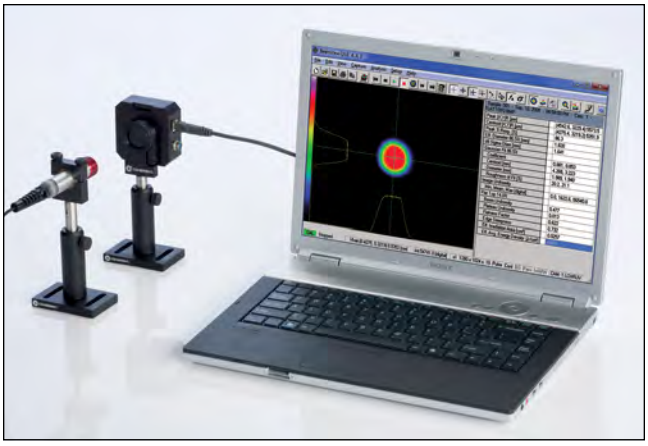

To monitor, analyze and archive laser beam images, BeamView Analyzer software is recognized as the leading laser beam profiling software. It has been designed to provide flexibility, speed, and user friendliness.

Features

- **High-speed USB 2.0 camera interface**
- **Supports all three LaserCam-HR camera types**
- **Remote control interface**
- **Over 30 numerical analysis functions**
- **Multiple image import and export formats**
- **Automatic background noise subtraction**
- **Pass/Fail fault settings, alarms, configurable setups**
- **Easy-to-use, intuitive user interface**
- **Windows XP, Vista 32-bit, Vista 64-bit, Windows 7 32-bit, Windows 7 64-bit**

BeamView-USB Analyzer Software

BeamView-USB Analyzer Software
BeamView-USB software includes features that extend the analytic capabilities of the LaserCam-HR laser beam diagnostic systems:

- Supports both 10-bit and 14-bit LaserCam-HR camera types
- Multiple LaserCam-HR camera types can be connected to a single system
- Flat-top beam analysis
- Adjustable trigger delay
- Report generation
- Variable exposure time
- RS-232 and TCP/IP remote communication protocols

Flat-Top Beam Analysis
Six additional calculations are now available with BeamView-USB software for flat-top beam analysis. These calculations are based on the ISO 13694:2000 standards. The six calculations allow greater flexibility for the analysis of applications involving flat-top beam shapes. They also may assist in the analysis of beam uniformity of excimer and Nd:YAG lasers in the near field. The six new calculations are:

- Plateau Uniformity
- Flatness Factor
- Edge Steepness
- Beam Uniformity
- Effective Irradiation Area
- Effective Average Power/Energy Density

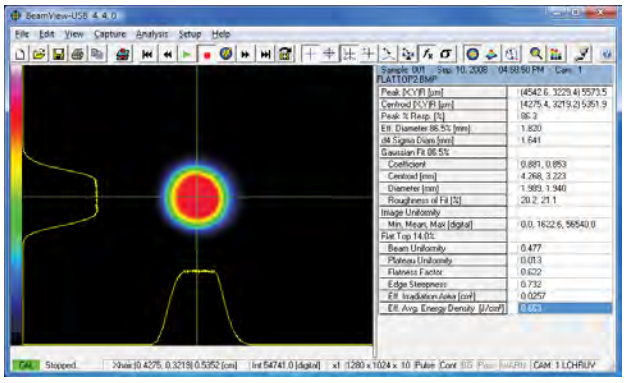

Screen shot of a flat-top beam image

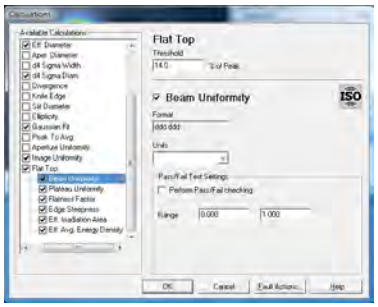

Image of dialog box for flat-top calculations.

BeamView Analyzer Software

BeamView Analyzer Software Features

Adjustable Trigger Delay
The adjustable Trigger Delay feature lets users add default trigger delay to the LaserCam-HR camera. This assists by providing additional flexibility when firing the camera from an external trigger source such as the SYNC Output of a laser.

Adjustable Exposure Time
The camera exposure time is adjustable through the camera settings menu for all LaserCam-HR camera models.

Report Generation
BeamView-USB includes a single-page report that can be sent directly to a printer, saved to a file (.txt), or converted to an Adobe .pdf file by using a pdf file converter. A simple screen print option is available from the same friendly dialog box used to generate a report.

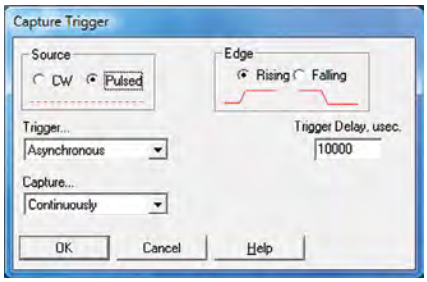

Screen shot of Capture/Trigger dialog box showing Trigger Delay setting

BeamView System Performance Optimization

BeamView software provides several functions that optimize the optical dynamic range available in the camera to achieve maximum measurement accuracy. The Automatic Background subtraction feature measures and stores the background noise "image" and automatically subtracts individual pixel noise levels from all subsequent laser images prior to analysis. The system also automatically monitors the background noise level to warn of changes that may effect measurement accuracy.

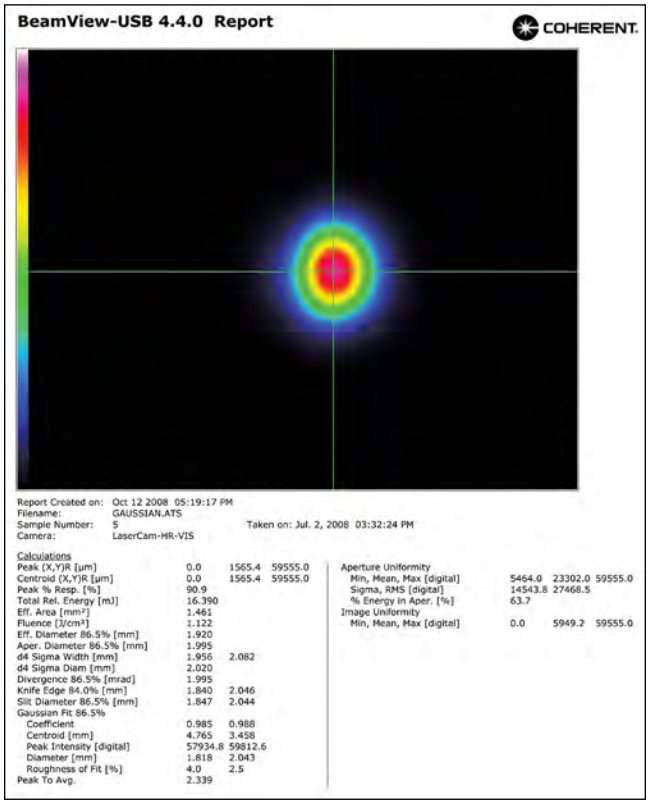

Screen shot of Print Screen dialog box and actual report

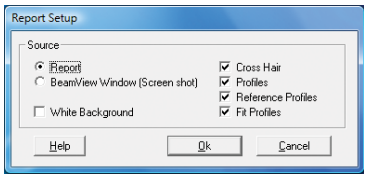

POWER & ENERGY
Power & Energy Meters
PowerMax-Pro Sensors
USB/RS Power Sensors
DB-25 Power Sensors
USB/RS Energy Sensors
DB-25 Energy Sensors
Custom & OEM
BEAM DIAGNOSTICS
CALIBRATION & SERVICE
Laser Cross-Reference Index
Model Name Index

BeamView Analyzer Software

BeamView Analyzer Software Features

POWER & ENERGY
Power & Energy Meters
PowerMax-Pro Sensors
USB/RS Power Sensors
DB-25 Power Sensors
USB/RS Energy Sensors
DB-25 Energy Sensors
Custom & OEM
BEAM DIAGNOSTICS
CALIBRATION & SERVICE
Laser Cross-Reference Index
Model Name Index

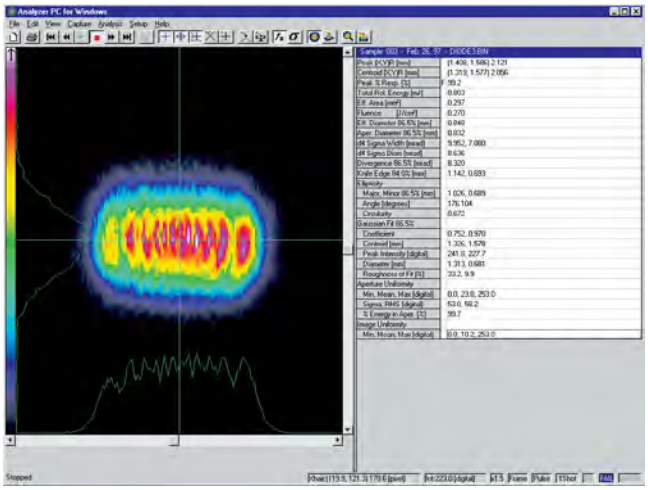

BeamView Analyzer Software Additional Features

- **More than 25 different numerical analysis functions**
- **Several different profile views**
- **Import and export of results data and profile data**
- **Pass/Fail settings and user-selectable fault actions**

Real-Time Laser Monitoring and Alignment
The Live Video mode provides a continuously updated image of the beam (~20 Hz to 25 Hz, depending on the speed of the processor) displayed in shades of gray or pseudo-color. This mode is ideal for monitoring the laser and observing changes in the form and structure of the beam as it is adjusted. It also allows for real-time tuning to achieve optimum beam profile quality and laser-cavity alignment. While operating in this mode, no beam or statistical data are displayed, but if Run is activated, the image is stored and can be analyzed later.

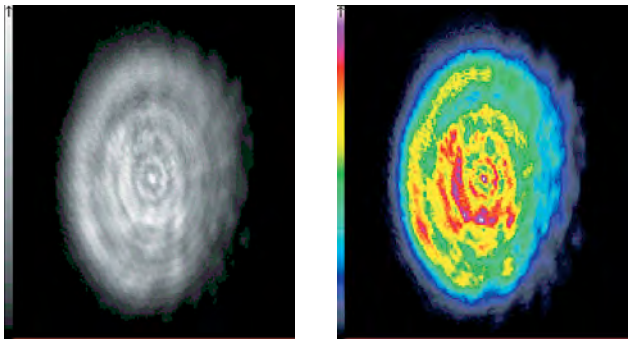

The Live Video mode

2D and 3D Intensity Plots
The Run command switches the BeamView Analyzer from the Stop or Live Video mode to continuous operation, which provides capture, analysis and display of beam image data. The view area of the computer monitor provides a choice of 2D or 3D images. The 2D contour maps and the 3D isometric plots display laser beam intensity profiles in a choice of color and gray-scale styles (fixed and autoscaling to a peak) and sizes (continuous zoom and pan control). The 2D maps can be shown with or without profiles (and Gaussian fit), reference position, variable aperture and rotatable crosshairs (with auto peak and auto centroid location). The 3D isometric plots can be displayed with transparent, hidden or solid wires, and can be rotated and viewed from different tilt angles.

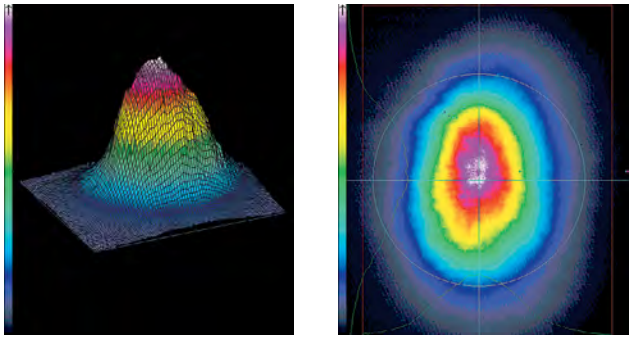

Choice of 3D and 2D images

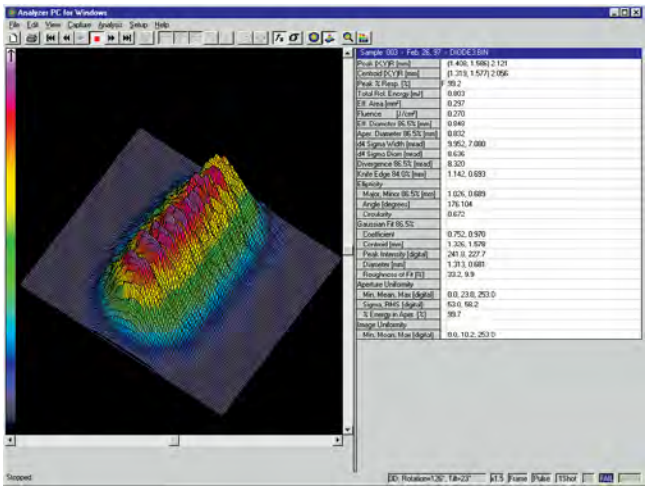

BeamView Analyzer display with 3D image and ISO-compatible results

BeamView Analyzer Software

BeamView Analyzer Software Features

Beam Stability

The continuous on-line statistical analysis display shows results of all, or a combination of, functions and pass/fail parameters for all captured samples and accumulated results. The user can scroll through the analysis results of individual images, and also view the minimum, maximum and sigma (standard deviation) values. This makes comparing individual samples to the time-dependent statistical data easy. Thus, the jitter and stability of parameters, such as power, energy, pointing direction, ellipticity and beam size, etc., can be analyzed simultaneously with a polar beam wander plot.

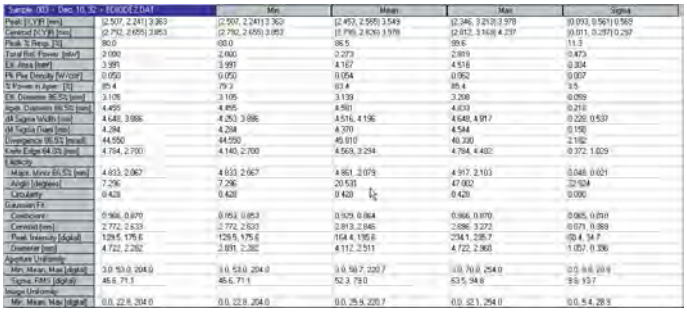

Continuous on-line statistical analysis display

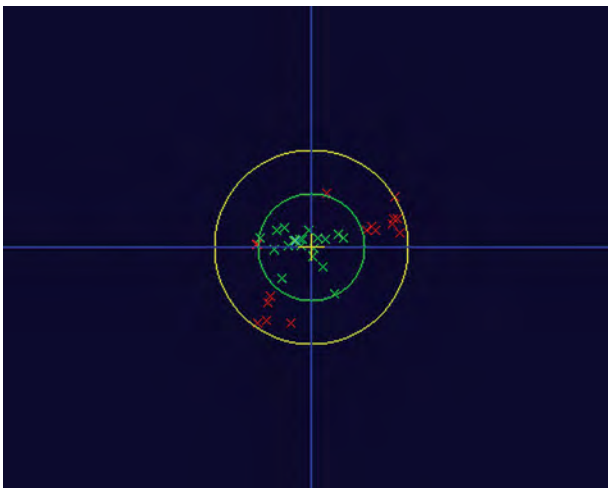

Polar beam wander plot screen

Pass/Fail Analysis

Pass/fail analysis allows simultaneous real-time monitoring of all, or any one of the analysis results against user-specified minimum/maximum limits. Any combination of, or all the fault actions can be activated to signal a test failure, initiate a visual alarm, an audio alarm, stop data capture, reject/save a failed sample, and generation of a TTL trigger pulse output signal.

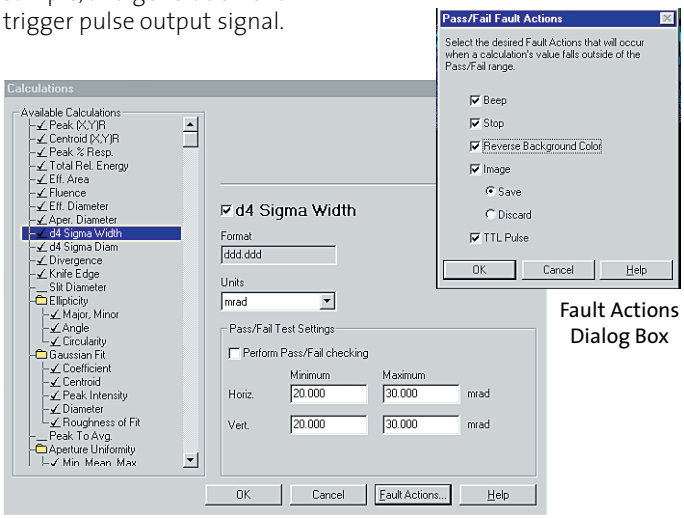

Fault Actions Dialog Box

Calculations Pass/Fail test settings

Remote Control

The BeamView Analyzer provides remote control and data transfer through a TCP/IP or RS-232 connection on the host computer. A complete control and data transfer command set is provided to allow users to develop their own remote control application for interfacing with the BeamView Analyzer software platform. The BeamView-USB software package includes an example LabVIEW VI for remote access to most BeamView features at a host computer running LabVIEW.

Beam Analysis and Statistics

BeamView Analyzer software calculations are compatible with the International Standards Organization (ISO) guidelines for laser beam measurement:

- Peak and centroid beam position
- Beam ellipticity including angular position and major/minor axis information
- Circularity
- D4σ diameters and widths
- Guassian fit including coefficient, centroid, and "roughness of fit"
- Aperture fit and uniformity
- Total/relative power
- Peak power/energy density
- Percent power within an aperture

BeamView Analyzer Software

BeamView Analyzer Software Features Summary

POWER & ENERGY
Power & Energy Meters
PowerMax-Pro Sensors
USB/RS Power Sensors
DB-25 Power Sensors
USB/RS Energy Sensors
DB-25 Energy Sensors
Custom & OEM
BEAM DIAGNOSTICS
CALIBRATION & SERVICE
Laser Cross-Reference Index
Model Name Index

Analysis, On-Line Pass/Fail Tests

- **Centroid position/wander**
- **Peak intensity/position**
- **Peak-to-average intensity**
- **Beam diameter/widths (selectable):**
  - Second moment (d4 Sigma)
  - Knife-edge
  - Slit
  - Aperture diameter
  - Effective diameter
- **Flat Top analysis (new in BeamView-USB 4.4):**
  - Beam uniformity
  - Plateau uniformity
  - Flatness factor
  - Effective irradiation area
  - Edge steepness
  - Effective average power/energy Density
- **Gaussian fits with:**
  - Correlation coefficient
  - Diameter
  - Centroid
  - Peak intensity
  - Fit roughness
- **Ellipticity at intensity slice:**
  - Major and minor axis diameter
  - Circularity (major/minor)
  - Axis orientation (rotation)
  - Auto align profiles to axis
- **Aperture analysis for circular, square, rectangular and elliptical beams:**
  - % power/energy in aperture
  - Uniformity in aperture
  - Aperture/diameter tracking
- **Selectable calculation area**
- **On-line statistical analysis (all results):**
  - Minimum, average, maximum
  - Sigma (standard deviation)
- **Pass/Fail test with fault action (all results):**
  - Ratio
  - Audio/visual alarms
  - Save/reject images
  - TTL pulse out
  - Stop data capture
- **Image averaging**
- **Peak energy/power density**
- **Relative energy/power**
- **Effective area**
- **Divergence at % energy/power**

Interactive Display Functions

- **On-line help**
- **Report generation:**
  - Report (.pdf)
  - BeamView window (screen capture)
- **Stored image paging**
- **Reference profile select**
- **Reference coordinate set**
- **Background subtraction**
- **Run/stop data analysis**
- **Control of cursors, profiles, aperture, position, rotation and size**
- **Live video on/off**
- **7 zoom levels**
- **Image and profile autoscale modes**
- **Auto peak/centroid locate**
- **"Hot" function keys**

BeamView Analyzer Software

BeamView Analyzer Software Features Summary

Image Capture and Storage

- Pulsed or CW (continuous) analysis
- Multi-channel (not simultaneous) camera input
- Support for multiple camera types
- Adjustable camera exposure time
- RS-232 and TCP/IP communication protocols
- Multiple trigger modes:
  - External trigger input
  - Autotrigger to a selected level
- 3 resolution modes with the LaserCam-HR and LaserCam-HR-UV cameras:
  - 1280 x 1024 x 10
  - 640 x 512 x 10
  - 640 x 512 x 8
- 1 resolution mode with the LaserCam-HR-InGaAs camera:
  - 320 x 256 x 14
- Various capture modes:
  - Continuous
  - Time interval
  - On command (keypress)
- High-speed sample mode capture
- Profile storage
- Configuration storage with password protection
- Image data file formats in binary (bin), ASCII (img), bmp, jpg, png, tif

Calibration Functions

- Fully automatic background map correction (pixel-by-pixel) with bias offset
- Automatic background monitor and warning
- Optical scale factor (magnification/reduction)
- Far-field optic focal length
- Power/energy calibration factor

Standard Graphics Feature

- Contour map with profiles/aperture overlay:
  - 3 plot types (contour/2D, 3D, Polar)
  - 4 scaling levels (fixed, scale-to-peak, low intensity, high intensity)
  - 4 style settings (gray, smooth, sharp, shaded bands)
- Live video mode
- Calculation inclusion area display
- Profile/peak/centroid position cursor
- Graphic zoom
- Auto-scale 2D or profile intensity
- Polar beam wander plot
- On/off axis simultaneous display of:
  - Position cursor
  - Cross-section profiles
  - Gaussian fit profiles
  - Reference profiles
  - Aperture overlay for:
    - Beam uniformity
    - % energy/power
- Rotatable color 3D isometric plot
  - 360°, 90° rotate/tilt
  - Hidden/transparent wire
  - Selectable wire density
  - Solid or single color
  - Auto-rotate mode

Beam Diagnostic Accessories

Laser-Grade Attenuation Optics for Cameras

POWER & ENERGY
Power & Energy Meters
PowerMax-Pro Sensors
USB/RS Power Sensors
DB-25 Power Sensors
USB/RS Energy Sensors
DB-25 Energy Sensors
Custom & OEM
BEAM DIAGNOSTICS
CALIBRATION & SERVICE
Laser Cross-Reference Index
Model Name Index

Attenuation Optics and Accessories

Features

- **Laser-grade attenuation optics**
- **Compatible with all Coherent beam diagnostic cameras**
- **Virtually undistorted and interference-free attenuation**
- **Variable and fixed attenuation for beams up to 2000W/cm² or 50J/cm²**
- **C-Mount threads couple directly to cameras**

Most cameras are too sensitive for direct viewing of laser beams. For example, a typical diagnostics camera saturates at only ~0.5 µW/cm² power density (at ~633 nm) or at ~9 nJ/cm² (at 1064 nm) pulsed energy density. If the camera has an electronic shutter, it can be used for some CW beam attenuation, but there is more flexibility in using optical attenuation. Any attenuation optics introduced in the beam path must be manufactured to exacting specifications. The optics must be laser-grade substrate, and use the proper flatness and wedge to avoid etaloning and fringing, so that the beam is not distorted by the introduction of the attenuation. We offer attenuation optics that are designed to these specifications and packaged for use with our cameras.

Typical attenuations are 1:1 to 400,000:1, but even larger attenuations are possible. All Coherent diagnostic cameras accept C-Mount optics and accessories, and are delivered without a standard window in front of the sensor array. Such windows are liable to distort the optical beam. However, a LDFP (Low-Distortion Face Plate) filter is supplied with each camera purchased from Coherent. The LDFP is a laser-grade optic specified and polished for diagnostics use. It is mounted in a housing with C-Mount threads and provides attenuation of room light so that the camera can be used with the lights on. For operation below 400 nm, the LDFP must be removed.

The Continuously Variable Attenuator Modules (C-VARM and UV C-VARM) contain two wedge attenuators that are continuously variable and a step attenuator that allows attenuation from 10^7:1 down to 3000:1. The C-VARM and UV C-VARM can be finely adjusted to achieve both precise attenuation levels and maximum use of the camera's optical dynamic range.

The Variable Attenuator Module (VARM) is a triple-wheel filter holder that contains three filters per wheel. The filters are made to our exacting specifications for transmission value and material quality. The VARM is adjustable in attenuation in 64 discrete steps of approximately 16% reduction each time from 400,000:1 down to 1:1. The VARM can be easily returned to exactly the same attenuation level as previously used.

The BeamCUBE Fixed-Attenuator Modules (BCUBE and UV-BCUBE) provide fixed attenuation and beam pickoff for performing diagnostics on high power laser sources. The BCUBE and UV-BCUBE utilize the front surface reflection from an uncoated laser mirror to achieve beam samples at 2% to 10% of the incident radiation, depending upon beam polarization. Multiple BCUBEs can be coupled together for even higher fixed attenuation levels.

Beam Diagnostic Accessories

Attenuation Optics for Cameras

BCUBE, UV-BCUBE, VARM, C-VARM, UV C-VARM and all other Coherent cameras have female C-Mount threading, making them easy to connect with the male C-Mount connection flange provided with each attenuator. Also, all attenuators have 1/4-20 tapped holes for independent post or plate mounting.

The C-Mount flanges (threaded rings) also have a female RMS microscope thread. This allows a microscope objective to be coupled to the attenuators and extension barrels in order to create a flexible close-up imaging system for analysis of small/focused beams, fiber optics, laser diodes or LEDs.

VARM, LaserCam-HR-InGaAs, C-VARM, BCUBE, C-Mount Flanges and Barrel

Avoiding Multi-Filter Beam Distortion

The wavefront distortion through a number of optical filters can be calculated by taking the square root of the sum of the squares of the wavefront distortion of the individual components. For example, if the individual optics are made to λ/10 specifications and six are used, a total λ/4 RMS wavefront distortion will be introduced to the beam:

$$\sqrt{0.1^2 + 0.1^2 + 0.1^2 + 0.1^2 + 0.1^2 + 0.1^2} = 0.25$$

In general, a camera cannot sense less than ~λ/4 total distortion in the beam, so if a series of filters is used, they must be made to very exacting laser-grade specifications. Attenuating optics from Coherent are manufactured to better than a λ/10 surface specification, so at least six optics in series can be used. Calculate the Low-Distortion Face Plate (LDFP) and each BCUBE as one optic, and the VARM or C-VARM as three optics each.

Attenuator Selection

Attenuation is selected on the basis of power density in W/cm² or energy density in J/cm². The attenuation from the camera's Low-Distortion Face Plate (LDFP) will allow an average power density of up to 1.2 mW/cm². There are then only two more steps to attenuation selection:

1) Choose either the VARM or the C-VARM for up to 1W/cm².
2) In addition or alternatively, use a BCUBE beamsplitter module to pick off between 2% and 10% of the beam (depending on polarization and wavelength).

Device Specifications	Model	VARM	C-VARM	UV C-VARM	BCUBE	UV-BCUBE	BARREL SET (Barrels, 3 C-Mount Flanges)
**C24	Wavelength						
	Min. (nm)	380	380	190	380	190	–
	Max. (nm)	2200	2200	1100	2200	2200	–
	Attenuation						
	From	4×10^5:1	10^7:1	10^5:1	50:1	50:1	–
	To	1:1	3000:1	300:1	10:1	10:1	–
	Aperture (mm)	19	15	15	19	19	–
	Max. Power Density (W/cm²)	1*	1*	1*	2.0×10^9	2.0×10^9	–
	Max. Energy Density (J/cm²)	0.1*	0.1*	0.008	50	50	–
	Beam Offset (mm)	–	–	–	4.0	4.0	–
	Part Number	33-3328-000	33-3336-000**	33-6859-000**	1098403**	1098466	1098426

* The maximum power and energy density listed are the levels at which thermal lensing occurs.
** C24 Quick Ship program: eligible for next business day shipment.

C-VARM and UV C-VARM

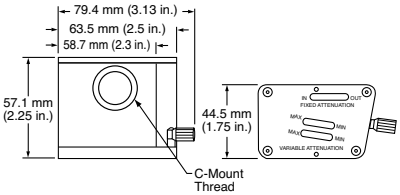

VARM

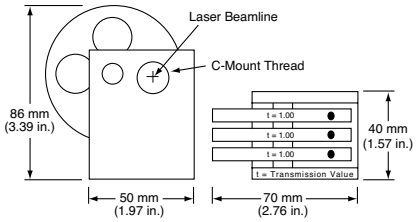

BCUBE and UV-BCUBE

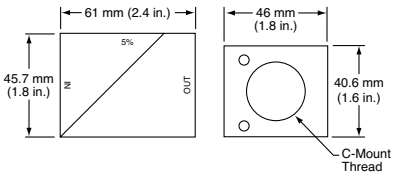

Beam Diagnostic Accessories

Extreme-UV Beam Intensity Profiler (BIP) Optics

POWER & ENERGY
Power & Energy Meters
PowerMax-Pro Sensors
USB/RS Power Sensors
DB-25 Power Sensors
USB/RS Energy Sensors
DB-25 Energy Sensors
Custom & OEM
BEAM DIAGNOSTICS
CALIBRATION & SERVICE
Laser Cross-Reference Index
Model Name Index

BIP-5000Z and BIP-12F attached to a LaserCam-HR

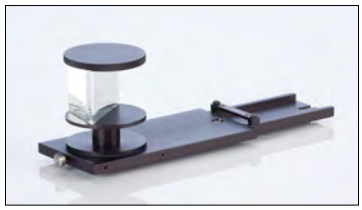

Features

- **UV operation from 10 nm to 355 nm**
- **Choice of 12 mm or 30 x 40 mm diameter apertures**
- **Operation with BeamView Analyzer Systems**

These Extreme-UV Beam Profiler Optics use UV-to-visible fluorescence converter face plates to couple the input laser beam to any appropriate Coherent camera. Any of our visible wavelength range cameras can be used with the Beam Intensity Profilers.

The Beam Intensity Profiler BIP-12F is a compact system accepting beams up to 12 mm in diameter from 10 nm to 355 nm. The front of the BIP-12F has a C-Mount thread, which allows it to be used in conjunction with the UV BeamCube when high power attenuation is needed for the spectral region 190 nm to 355 nm (see Laser-Grade Attenuation Optics for Cameras on page 118). The Beam Intensity Profiler BIP-5000Z has a zoom magnification range of 6:1 to 1:1 and accepts beams up to 30 mm by 40 mm from 10 nm to 320 nm. It comes with the mount shown.

BIP-5000SPL Beamsplitter

When laser beam power or energy density exceeds recommended ranges, this beamsplitter provides additional high power attenuation capability for the BIP-5000Z. It provides a right-angle pick-off function and attaches to the entrance aperture of the BIP-5000Z.

Device Specifications

Model	BIP-12F (2:1)	BIP-12F (1:1)	BIP-5000Z	BIP-5000SPL
Wavelength (nm)	10 to 355		10 to 320	10 to 320
Aperture (mm)	Ø12		30 x 40	Ø50
Resolution (camera-dependent)(µm)	20		70	–
Saturation				
at 193 to 248 nm	10 mJ/cm²		30 mJ/cm²	–
at 308 nm	50 mJ/cm²		50 mJ/cm2	–
Sensitivity	5 µJ/cm²		5 µJ/cm²	–
Damage Threshold				
CW	5W/cm²		1.5W/cm²	10W/cm²
Pulsed	500 mJ/cm²		600 mJ/cm²	50 J/cm²
Uniformity Over Aperture (%)	5			–
Image Persistence (fluorescence lifetime)	500 ns		5 µs	–
Image Magnification	2:1	1:1	6:1(Zoom) to 1:1	–
Part Number	33-3468-000	1053418	33-3484-000	33-3492-000

BIP-5000Z

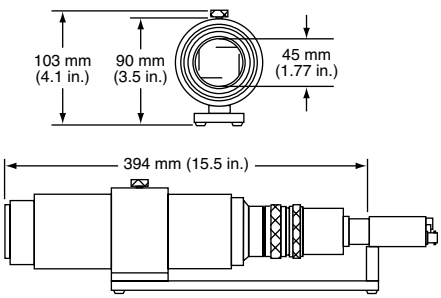

BIP-12F

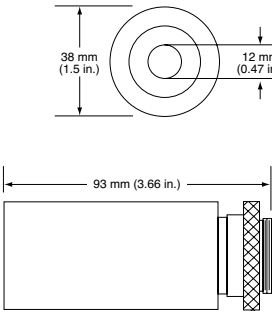

BeamMaster

Knife-Edge Beam Profiler

Features

- CW laser beam shape, power and position measurements
- Beam sizes from 3 µm to 9 mm with 0.1 µm resolution and high dynamic range
- Real-time Windows display, analysis and data logging system
- Wavelengths from 190 nm to 1800 nm
- USB interface
- Windows 7, 8, 10 (32- or 64-bit)

BeamMaster is a high-precision, multiple knife-edge scanning laser beam profiler which can be configured to sample, measure and display cross-sectional profiles and/or 2D and 3D image plots in real time up to 5 Hz. Selectable averaging of 1 to 20 samples provides noise reduction and maximizes measurement accuracy. Data can be collected, displayed, stored and continuously streamed via USB. All screen images can be captured and stored, or printed.

BeamMaster can measure focused beam spots as small as 3 µm with 0.1 µm resolution and has an aperture as large as 9 mm with 1 µm resolution for larger beams. Measurements can be made from 190 nm to 1100 nm (Si-Enhanced) and from 800 nm to 1800 nm (InGaAs). Input powers can be as low as 10 µW. There is automatic gain control and two internal distortion-free optical attenuation filters are included (Si-Enhanced models)

Multiple Knife-Edges for Greater Resolution and Accuracy
BeamMaster is an advancement over the more common types of beam profilers, which use two orthogonal knife-edges or slits to scan the beam profile. The BeamMaster model BM-7 uses seven individual knife-edges on a rotating drum to scan the beam through seven different axes in a single rotation. This provides more accurate measurements of the true beam shape and dimensions by tomographically combining the data from all seven scans to reconstruct a profile of the beam. This technique also makes locating the angular orientation of elliptical beam major/minor axes much easier than searching by rotating the sensor head around the optical beam axis. For applications with circular or near-Gaussian beams, the lower-cost BM-3, with only three knife-edges, is also available.

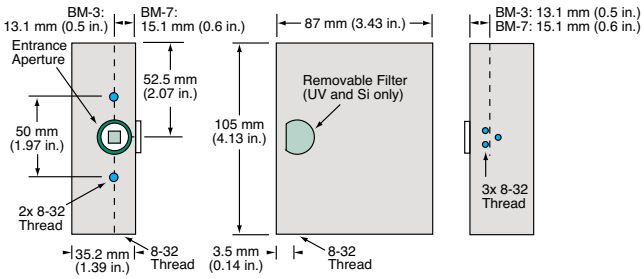

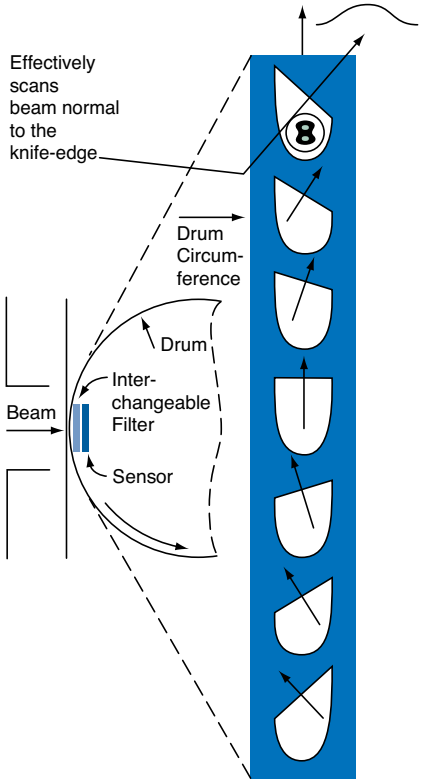

POWER & ENERGY
Power & Energy Meters
PowerMax-Pro Sensors
USB/RS Power Sensors
DB-25 Power Sensors
USB/RS Energy Sensors
DB-25 Energy Sensors
Custom & OEM
BEAM DIAGNOSTICS
CALIBRATION & SERVICE
Laser Cross-Reference Index
Model Name Index

BeamMaster

Knife-Edge Beam Profiler

POWER & ENERGY
Power & Energy Meters
PowerMax-Pro Sensors
USB/RS Power Sensors
DB-25 Power Sensors
USB/RS Energy Sensors
DB-25 Energy Sensors
Custom & OEM
BEAM DIAGNOSTICS
CALIBRATION & SERVICE
Laser Cross-Reference Index
Model Name Index

Beam Profiles and Widths

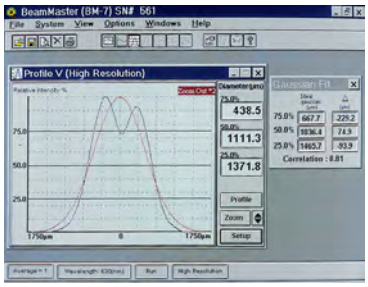

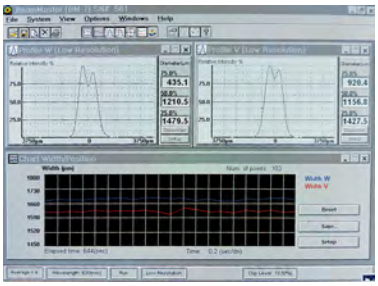

On each rotation of the drum, BeamMaster captures and processes the data from the passage of the seven knife edges across the beam (three knife edges with BM-3) as power, position and profile information. This information can be displayed every rotation, strip-charted, and sent to a file. Two orthogonal profiles can be displayed and the beam widths can be digitally displayed for any three user-chosen clip levels. A Gaussian-fit profile can be overlaid on any chosen measured profile and the fit and correlation parameters can be displayed.

To obtain the maximum profile detail, the system automatically centers the profile and zooms to display ~3 times the beam width, and the profile intensity data is autoscaled (optional) to fit the display height. Note: Unlike the PCI version, the USB model is always in high resolution mode for maximum detail.

Beam Position and Ellipticity

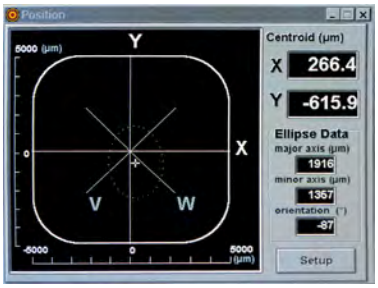

The beam centroid position can be continuously monitored relative to the center of the sensor area, along with the beam shape, ellipticity (major and minor axes) and angular orientation. A zoom function is available and the user can choose the clip level and strip-chart the position (X and Y) data to monitor short-term or long-term, time-dependent stability or drift.

Power Measurement

The beam power can be displayed either as a digital readout or in combination with an analog "needle." Units can be chosen as µW, mW or dBm, and the user can offset the zero and zoom in on any part of the power range. Attenuator (filter) files can be selected, and a test range can be selected and displayed to monitor beam power within specific limits, with optional audio alarms.

Data Collecting and QA Testing

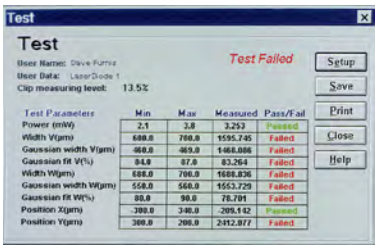

Data regarding beam size, position and power can be continuously displayed in analog, digital and strip chart forms on the computer screen. Data can also be logged to a data file in real time for later processing or test report generation. Pass/Fail testing can be performed on measured results for acceptance within specific tolerances. All screen images also can be captured and stored as BMP or JPG files.

2D and 3D Intensity Plots

The projection function provides either a 2D or 3D view of the beam intensity profile. The projection is created using reconstructive tomography. The same method is used to produce 3D images with X-ray systems. The more knife edges, the greater the level of detail that can be obtained. For a beam distribution that is significantly non-Gaussian, such as that from a diode laser, the standard seven-knife-edge system can reconstruct a plot that closely matches the real beam. When examining near-Gaussian beams, the three-knife-edge system gives an accurate intensity distribution.

The 2D contour maps and the 3D isometric plots can be displayed with or without scan axis and grids, and the isometric plots can be rotated for easier viewing of the detailed structure.

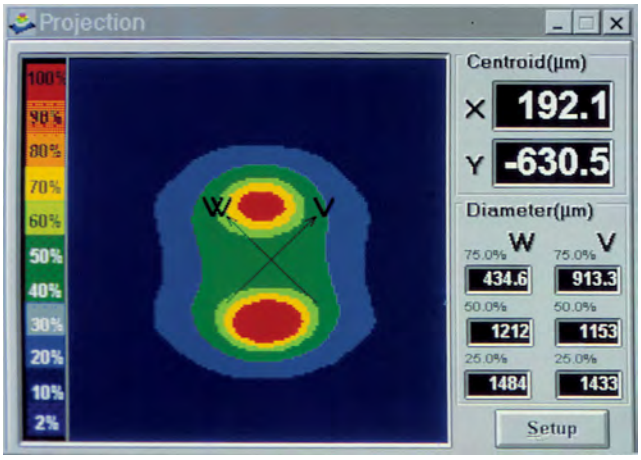

BeamMaster 2D Intensity Plot

BeamMaster

BeamMaster Accessories

BeamMaster System Components

Each BeamMaster system consists of a sensor head, complete with a 1.8 m cable, USB interface module to plug into a PC computer, complete Windows software on a CD-ROM disk, a 0.5" mounting post (threaded 8-32) and stand, and optical filters (for Si-Enhanced).

Optical Filters

The BM-7 and BM-3 Si-Enhanced heads come with two neutral density filters. NG4 and NG9 filters (complete with transmission curves) are provided to extend the power range of the heads from 5 mW to 1W in the 400 nm to 1100 nm range. The NG4 filter comes pre-installed and provides ~10% transmission at 633 nm. The NG9 filter is in a protective filter case and provides ~0.5% transmission at 633 nm. There is no filter in the BeamMaster InGaAs head configurations.

BeamMaster Accessories

An optional mount is available to enable rotation of the BeamMaster sensor head about the optical axis. This mount has a 360-degree calibrated scale with a locking screw. An optional C-Mount Adapter Plate allows the attachment of any C-Mount, threaded optical accessory, such as a BCUBE high power attenuator pickoff optic (see the Beam Diagnostics Accessories section on pages 118-120).

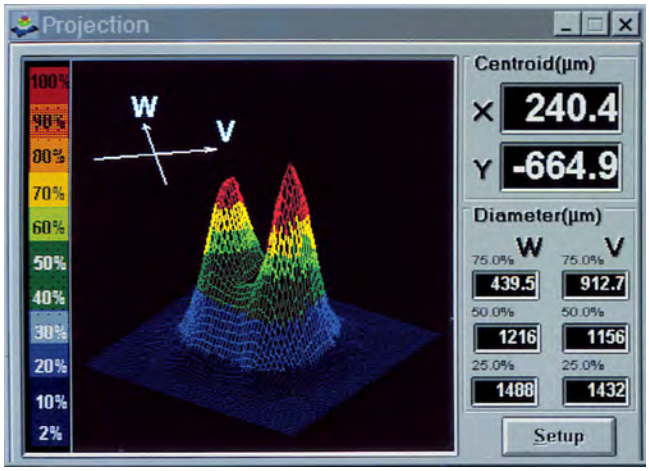

BeamMaster 2D Intensity Plot

Device Specifications

Model	BeamMaster
Measurement Rate (Hz)	5
Wavelength Range (nm)	190 to 1100 [BM-7 Si-Enhanced, BM-3 Si-Enhanced] 800 to 1800 [BM-7 InGaAs (3 or 5 mm), BM-3 InGaAs (3 mm)]
Sensor Aperture	9 mm square [BM-7 (Si-Enhanced)] 5 mm circular [BM-3 (Si-Enhanced)] 3 mm circular [BM-3 and BM-7 (InGaAs)] (optional BM-7 InGaAs 5 mm available)
Minimum Beam Size (µm)	15 (BM-7 all models) 3 (BM-3 all models)
Beam Size Resolution	1 µm for beams >100 µm in size (0.1 µm for beams <100 µm in size)
Position Measurement Resolution (µm)	1
Position Measurement Accuracy (µm)	±15
Beam Width Measurement Accuracy (%)	±2
Beam Power Range	10 µW to 1 W (with supplied internal filters), saturation 0.1 W/cm² without filter, 20W/cm² with NG9 filter [BM-7, BM-3 (Si-Enhanced)] 10 µW to 5 mW (no filters provided), saturation 0.1 W/cm² [BM-3 InGaAs, BM-7 InGaAs]
Relative Power Measurement	0.1 µW resolution
Sensor Head Weight (g)	56 g
Part Number	
1224014	BeamMaster BM-7 Si-Enhanced - USB interface
1224012	BeamMaster BM-3 Si-Enhanced - USB interface
1224018	BeamMaster BM-7 InGaAs (3 mm) - USB interface
1224020	BeamMaster BM-7 InGaAs (5 mm) - USB interface
1224016	BeamMaster BM-3 InGaAs (3 mm) - USB interface
1038024	BeamMaster Rotation Mount
33-7147-000	BeamMaster C-Mount Adapter Plate

Calibration and Service

ISO 17025 Accreditation

POWER & ENERGY
Power & Energy Meters
PowerMax-Pro Sensors
USB/RS Power Sensors
DB-25 Power Sensors
USB/RS Energy Sensors
DB-25 Energy Sensors
Custom & OEM
BEAM DIAGNOSTICS
CALIBRATION & SERVICE
Laser Cross-Reference Index
Model Name Index

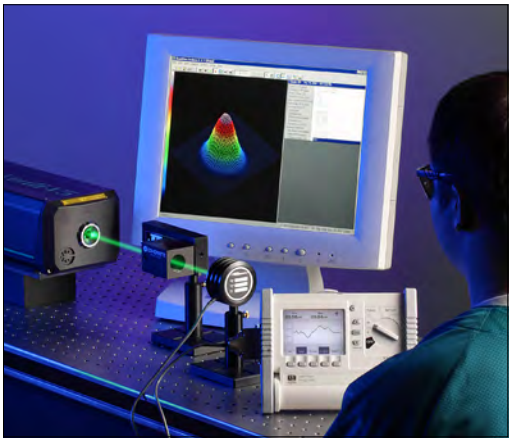

ISO/IEC 17025:2005 Accredited

Coherent's calibration laboratories – located in Wilsonville, Oregon; Tokyo, Japan; and Dieburg, Germany – are fully accredited to ISO/IEC 17025:2005 by ANAB, a brand of the ANSI-ASQ National Accreditation Board and recognized internationally by ILAC, APLAC, and IAAC. **ISO 17025 is the single most important metrology standard for test and measurement products, and external accreditation is a formal recognition that a calibration laboratory is using valid and appropriate methods and is competent to carry out specified tests or calibrations.**

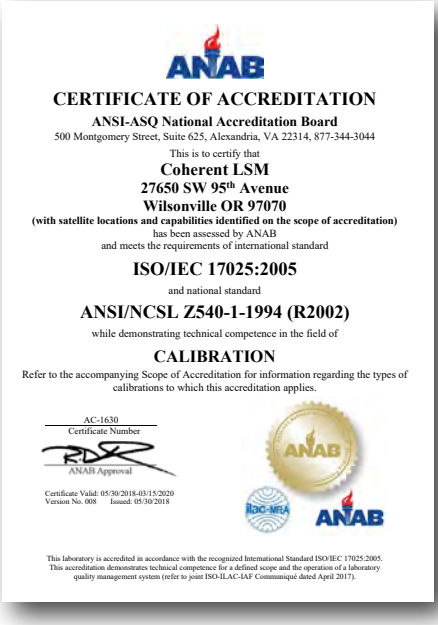

ANAB

CERTIFICATE OF ACCREDITATION

ANSI-ASQ National Accreditation Board
500 Montgomery Street, Suite 625, Alexandria, VA 22314, 877-344-3044

This is to certify that

Coherent LSM
27650 SW 95th Avenue
Wilsonville OR 97070
(with satellite locations and capabilities identified on the scope of accreditation)
has been assessed by ANAB
and meets the requirements of international standard

ISO/IEC 17025:2005

and national standard

ANSI/NCSL Z540-1-1994 (R2002)

while demonstrating technical competence in the field of

CALIBRATION

Refer to the accompanying Scope of Accreditation for information regarding the types of calibrations to which this accreditation applies.

AC-1630
Certificate Number

ANAB Approval

Certificate Valid: 05/30/2018-03/15/2020
Version No. 008 Issued: 05/30/2018

This laboratory is accredited in accordance with the recognized International Standard ISO/IEC 17025:2005. This accreditation demonstrates technical competence for a defined scope and the operation of a laboratory quality management system (refer to joint ISO-ILAC-IAF Communiqué dated April 2017).

Scope of Accreditation

The scope of accreditation applies to the laser/electrical calibration of nearly all the company's catalog pyroelectric laser energy sensors, thermopile laser power sensors and meter electronics. Pages in this catalog that contain products that fall within the scope of accreditation are clearly identified by the combined ILAC-MRA/ACLASS mark shown below:

ilac-MRA

ANAB ACCREDITED ISO/IEC 17025 CALIBRATION LABORATORY AC-1630

ISO 17025

The formal scope of accreditation can be found on the Coherent website at http:/www.coherent.com within Company tab > Quality. It can also be found within the ANAB website at http://www.anab.org. Click the "Accredited Organizations" button on their homepage.

ISO 17025 is an international standard that governs calibration labs. It requires labs demonstrate that they operate a quality management system that controls the processes and documentation, including auditing and corrective action processes. It also requires adherence to rigorous technical requirements that ensure valid results are generated.

In terms of specific technical requirements, ISO/IEC 17025 ensures that a company:

- maintains testing facilities and equipment to specified standards
- ensures protocols are fully documented
- trains workers to an appropriate level of competence
- confirms validity and appropriateness of methods, especially so called "non-standard" methods such as those used to calibrate laser measurement equipment, which have been developed internally
- uses accepted mathematical methods for calculating results
- verifies that purchased test equipment meets proper requirements, and that all equipment used to produce accredited calibrations has itself received ISO 17025 accredited calibrations
- has a traceable path of calibration to independently maintained national or international standards
- provides both as received and outgoing testing data to customers in an approved format
- ensures the calibration certificate meets the requirements of the standard

The outcome of all these efforts is that customers can have confidence that a laboratory achieves verifiably correct results, and that these results will be reported in an unambiguous manner.

Calibration and Service

Warranty and RMA Instructions

Limited Warranty
Coherent, Inc., warrants to the original purchaser that its laser power and energy meters and sensors are free from defects in materials and workmanship and comply with all specifications, active at the time of purchase, for a period of twelve (12) months. Coherent, Inc., will, at its option, repair or replace any product or component found to be defective during the warranty period. This warranty applies only to the original purchaser and is not transferable.

Extended Warranty
Coherent, Inc., offers original purchasers of laser power and energy meters and sensors an extended twelve month warranty program, which includes all parts and labor. In order to qualify for this warranty, a Customer must return the Product to the Company for recalibration and recertification. The Company will recertify the Product, provide software upgrades, and perform any needed repairs, and recalibrate the Product, for a fixed service fee. If the Product fails and is returned to the Company within one year following the date of recalibration and recertification service, the Company will, at its option, repair or replace the Product or any component found to be defective.

Contact Coherent or visit www.Coherent.com/LMC for additional details and warranty limitations.

Obtaining Warranty Service
In order to arrange for warranty service or annual recalibration, first contact your closest Coherent service center to obtain a Return Material Authorization (RMA) number.

USA
Phone: 1 (800) 343 4912
Phone: 1 (408) 767 4042
E-mail: LSMservice@coherent.com

Asia
Phone: 813 5635 8680
E-mail: LSMservice@coherent.com

Europe
Phone: 49 6071 968 0
E-mail: Service.LMC.Dieburg@coherent.com

Detailed instructions for preparing and shipping your instrument can be found below.

Instructions for Returning Equipment for Service and Calibration

To prepare your instrument, meter or sensor for return to Coherent, attach a tag to the unit that includes the name and address of the owner, the contact individual, the serial number, and the RMA number you received from Customer Service.

Wrap the product with polyethylene sheeting or equivalent material. If the original packing material and carton are not available, obtain a corrugated cardboard shipping carton with inside dimensions that are at least 6 in. (15 cm) taller, wider, and deeper than the product. The shipping carton must be constructed of cardboard with a minimum 375 lbs. (170 kg) test strength. Cushion the instrument unit in the shipping carton, using 3 in. (7.5 cm) of packing material or urethane foam on all sides, top, bottom, and between the carton and the instrument or sensor. Seal the shipping carton with shipping tape or an industrial stapler.

Shipping addresses for our repair and calibration facilities are given below:

USA
Coherent, Inc.
Laser Measurement and Control Service
Attn: RMA #
27650 SW 95th Ave.
Wilsonville, OR 97070
USA

Europe
Coherent Shared Services B.V.
Dieselstr. 5b
D-64807 Dieburg
Germany

Japan
Coherent Japan
1042-4 Toda,
Atsugi City, Kanagawa
Japan
243-0023

Measurement Products for Use with Coherent Lasers

Matrix of Recommendations*

POWER & ENERGY
Power & Energy Meters
PowerMax-Pro Sensors
USB/RS Power Sensors
DB-25 Power Sensors
USB/RS Energy Sensors
DB-25 Energy Sensors
Custom & OEM
BEAM DIAGNOSTICS
CALIBRATION & SERVICE
Laser Cross-Reference Index
Model Name Index

CO_2 (Diamond) Lasers	Laser	Wavelength (µm)	Power Meter	Power Sensor
	C-20, C-30	10.6	FieldMaxII-TO	PM30
	C-40, C-55 C-70, J-2	10.6, 9.4	FieldMaxII-TO	PM150
	J-3-5 CO Laser	5	FieldMaxII-TO	PM300, PM300F
	E-150, GEM-100, G-100, G-150, G-100i	10.6, 9.4	FieldMaxII-TO	PM150
	E-250, E250i, J-3	10.6, 9.4	FieldMaxII-TO	PM300F-19
	E-400, E-400i, E-1000, J-5, K-500	10.6	FieldMaxII-TO	PM1K
	K-250, K-225i, K-300 (discontinued 2014)	10.6, 9.4	FieldMaxII-TO	PM300F-19
	GEM Select 50, 100 (discontinued 2010)	9.2 to 10.8	FieldMaxII-TO	PM150
	EOM-10 (discontinued 2010)	10.6	FieldMaxII-TO	PM10
	MID-IR-2 (discontinued 2010)	4.6 to 5.4	FieldMaxII-TO	PM10
	SIFIR (discontinued 2010)	40 to 1020	FieldMaxII-TO	PS10

Industrial Fiber & Diode Lasers	Laser	Wavelength (nm)	Power Meter	Power Sensor
	HighLight FL Series	-	FieldMaxII-TO	PM5K
	HighLight FL 1000P	1064	FieldMaxII-TO	PM5K
	HighLight D-Series	975	FieldMaxII-TO	PM5K
	DF Series	-	FieldMaxII-TO	PM5K
	CORELASE	-	FieldMaxII-TO	PM5K
	QFS w FLBK SC	1055 to 1070	FieldMaxII-TO	PM150-50
	SLS	1064	FieldMaxII-TO	PM150-50, PM5K
	NA	1064	FieldMaxII-TO	PM150-50
	KLS	1064	FieldMaxII-TO	PM150-50
	FLS CL	1064	FieldMaxII-TO	PM5K
	FLS A	1064	FieldMaxII-TO	PM5K
	QFS 50	1055 to 1070	FieldMaxII-TO	PM150-50

CW Solid-State Lasers	Laser	Wavelength (nm)	Power Meter	Power Sensor
	Genesis Lasers	355 to 577	FieldMaxII-TO	PM10
	Sapphire Lasers	458 to 594	FieldMaxII-TO	PS10
	OBIS Lasers	355 to 785	FieldMaxII-TO	PS10
	Verdi Lasers	532	FieldMaxII-TO	PM10, PM30
	Diode Lasers			
	CUBE	375 to 785	FieldMaxII-TO	PS10
	OBIS	355 to 785	FieldMaxII-TO	PS10
	Radius	375 to 635	FieldMaxII-TO	PS10
	All Laser Diode Modules		FieldMaxII-TO	PS10
	FAP	780 to 840	LabMax-TOP	LM-150FS + SMA adaptor
	Duo FAP	785 to 820	LabMax-TOP	LM-150FS + SMA adaptor
	Quattro FAP	790 to 980	LabMax-TOP	LM-150FS + SMA adaptor
	HighLight FAP	800 to 820	LabMax-TOP	LM-150FS + SMA adaptor
	HighLight 1000FL	1100	FieldMaxII-TO	PM1K
	HighLight 4000L (discontinued 2013)	808	FieldMaxII-TO	PM5K-100
	HighLight D-Series	975	Call Factory	Call Factory

Diode-Pumped Solid-State (CW)	Laser	Wavelength (nm)	Power Meter	Power Sensor
	Azure	266	FieldMaxII-TO	PM10X or PS10*
	Compass 1064 (discontinued 2010)	1064	FieldMaxII-TO	PM10
	Compass 115M, 215M, 315M	532	FieldMaxII-TO	PS10
	Compass 561 (discontinued 2014)	561	FieldMaxII-TO	PS10
	MBD 200	455 to 1070	FieldMaxII-TO	PS10
	MBD 266	266	FieldMaxII-TO	PM10X or PS10*
	Mephisto, Mephisoto S	1064, 1319	FieldMaxII-TO	PM10
	Mephisto MOPA (<30 W)	1064	FieldMaxII-TO	PM30
	Mephisto MOPA (>30 W)	1064	FieldMaxII-TO	PM150

* The PS10 is recommended when making higher resolution or low power measurements.

Measurement Products for Use with Coherent Lasers

Matrix of Recommendations*

Diode-Pumped Solid-State (CW)

Laser	Wavelength (nm)	Power Meter	Power Sensor
Paladin 355 (<10 W)	355	FieldMaxII-TO	PM10X
Paladin 355 (>10 W)	1355	FieldMaxII-TO	PM30X
Paladin 532	532	FieldMaxII-TO	PM30
Prometheus, Iodine Frequency Stabilization	532, 1064	FieldMaxII-TO	PM10 or PS10*
Sapphire 458 to 594	458 to 594	FieldMaxII-TO	PS10
Sapphire 488 HP	488	FieldMaxII-TO	PM10 or PS10*
Verdi V-Series, G-Series (<10 W)	532	FieldMaxII-TO	PM10
Verdi V-Series, G-Series (>10 W)	532	FieldMaxII-TO	PM30
Verdi IR	1064	FieldMaxII-TO	PM30

Diode-Pumped Solid-State (pulsed)

Laser	Wavelength (nm)	Power Meter	Power Sensor	Energy Meter	Energy Sensor
AVIA (<10 W)	266, 355	FieldMaxII-TO	PM10X		
AVIA (10 to 30 W)	355, 532	FieldMaxII-TO	PM30X		
AVIA NX (>30 W)	355, 532	FieldMaxII-TO	PM150		
Daytona (discontinued 2014)	355	FieldMaxII-TO	PM30X		
Flare	355, 532, 1064			LabMax-TOP	J-10MB-HE
Helios	532, 1064	FieldMaxII-TO	PM10		
HYPER RAPID 25	355, 532, 1064	FieldMaxII-TO	PM30		
HYPER RAPID 50	355, 532, 1064	FieldMaxII-TO	PM150		
Indigo-DUV (discontinued 2010)	193	FieldMaxII-TO	PS10	LabMax-TOP	J-10MT-10KHZ
Indigo-S (discontinued 2010)	193 to 900	FieldMaxII-TO	PS10	LabMax-TOP	J-10MT-10KHZ
Mamba Green, IR	532, 1064	FieldMaxII-TO	PM1K		
MATRIX 532, 1064	532, 1064	FieldMaxII-TO	PM30		
MATRIX 355	355	FieldMaxII-TO	PM10X		
Mephisto Q	1064	FieldMaxII-TO	PM10 or PS10*	LabMax-TOP	J-10MT-10KHZ
PRISMA (<10 W) (discontinued 2011)	532, 1064	FieldMaxII-TO	PM10		
PRISMA (>10 W) (discontinued 2011)	532, 1064	FieldMaxII-TO	PM30		
RAPID, RAPID 10	355, 532, 1064	FieldMaxII-TO	PM10		
Staccato	1030	FieldMaxII-TO	PM10		
SUPER RAPID-HE	355, 532, 1064	FieldMaxII-TO	PM10		
Talisker	355, 532, 1064	FieldMaxII-TO	PM30		
Vector (discontinued 2010)	532, 1064	FieldMaxII-TO	PM10		

Optically Pumped Semiconductor

Laser	Wavelength (nm)	Power Meter	Power Sensor
Genesis 355	355	FieldMaxII-TO	PS10
Genesis	460 to 639	FieldMaxII-TO	PM10

Ion

Laser	Wavelength (nm)	Power Meter	Power Sensor
Innova (<1 W)	200 to 1100	FieldMaxII-TO	PS10
Innova (>1 W)	200 to 1100	FieldMaxII-TO	PM10
Innova 300C	229 to 529	FieldMaxII-TO	PM10 or PS10*
Innova 70C	400 to 800	FieldMaxII-TO	PM10 or PS10*
Innova 90C	330 to 1090	FieldMaxII-TO	PM10 or PS10*

Pulsed/Dye

Laser	Wavelength (nm)	Power Meter	Power Sensor
ScanMatePro (discontinued 2007)	320 to 860	FieldMaxII-TO	PM10

Tunable

Laser	Wavelength (nm)	Power Meter	Power Sensor
MBR Ring	700 to 1030	FieldMaxII-TO	PM10
MBR Ring Series	700 to 1030	FieldMaxII-TO	PM30
MBD-200	455 to 1080	FieldMaxII-TO	PM10 or PS10*

* The PS10 is recommended when making higher resolution or low power measurements.

Measurement Products for Use with Coherent Lasers

Matrix of Recommendations*

POWER & ENERGY
Power & Energy Meters
PowerMax-Pro Sensors
USB/RS Power Sensors
DB-25 Power Sensors
USB/RS Energy Sensors
DB-25 Energy Sensors
Custom & OEM
BEAM DIAGNOSTICS
CALIBRATION & SERVICE
Laser Cross-Reference Index
Model Name Index

Ultrafast Lasers for Science

Laser	Wavelength	Power Meter	Power Sensor	Energy Meter	Energy Sensor
Fidelity-2	1070 nm	FieldMaxII-TO	PM10		
Mira OPO	500 to 1600 nm	FieldMaxII-TO	PS10		
OPerA Solo	240 nm to 20 µm	FieldMaxII-TO	PS10	LabMax-TOP	J-10MT-10KHZ
TOPAS	240 nm to 20 µm	FieldMaxII-TO	PS10	LabMax-TOP	J-10MT-10KHZ
OPA 9400, 9800	480 to 2400 nm	FieldMaxII-TO	PS10		

Excimer Lasers & UV Beam Delivery

Laser	Wavelength (nm)	Power Meter	Power Sensor	Energy Meter	Energy Sensor
BraggStar S (discontinued 2013)	193, 248	FieldMaxII-TO	PM10X	LabMax-TOP	J-25MT-10KHZ
BraggStar M	248	FieldMaxII-TO	PM30X	LabMax-TOP	J-50MUV-248
COMPexPro F2 (discontinued 2008)	157	FieldMaxII-TO	PM10X	FieldMaxII-TOP	J-25MUV-193
COMPexPro 50, 102, 110, 201, 205	193	FieldMaxII-TO	PM150-50XC	FieldMaxII-TOP	J-50MUV-193
COMPexPro 50, 102, 110, 201, 205	248	FieldMaxII-TO	PM150X	FieldMaxII-TOP	J-50MUV-248 + lg heat sink
COMPexPro 102, 110, 201, 205	308, 351	FieldMaxII-TO	PM150X	FieldMaxII-TOP	J-50MB-YAG
ExciStar XS 200	157, 193	FieldMaxII-TO	PM10X	FieldMaxII-TOP	J-25MUV-193
ExciStar XS 200	248, 351	FieldMaxII-TO	PM10X	FieldMaxII-TOP	J-25MUV-248
ExciStar XS 500	157, 193, 248, 351	FieldMaxII-TO	PM10X	LabMax-TOP	J-25MT-10KHZ
ExciStar S	157, 193	FieldMaxII-TO	PM10X	LabMax-TOP	J-25MT-10KHZ
ExciStar S	248	FieldMaxII-TO	PM30X	LabMax-TOP	J-25MT-10KHZ + sm heat sink
ExciStar S	308	FieldMaxII-TO	PM10X	LabMax-TOP	J-25MT-10KHZ
IndyStar	193, 248	FieldMaxII-TO	PM30X	LabMax-TOP	J-25MT-10KHZ + sm heat sink
LEAP	248, 308	FieldMaxII-TO	PM150X		
LPFPro 205, 220	157	FieldMaxII-TO	PM150-50XC	FieldMaxII-TOP	J-50MUV-193
LPXPro 210, 220, 305	193, 248, 308, 351	FieldMaxII-TO	PM150X		
Xantos XS (discontinued 2013)	157, 193, 248, 351	FieldMaxII-TO	PM10X	LabMax-TOP	J-25MT-10KHZ
Lambda SX-Series (<300 W)	248, 308	FieldMaxII-TO	PM300F-50X		
Lambda SX-Series (>300 W)	308	FieldMaxII-TO	PM1KX		
VYPER	308	FieldMaxII-TO	PM1KX		

Laser Diode Modules

Laser	Wavelength (nm)	Power Meter	Power Sensor
StingRay and BioRay Lasers	405 to 830	FieldMaxII-TO	PS10
Mini Laser	635 to 830	FieldMaxII-TOP	OP-2VIS

Industrial Short-Pulse Lasers (Diode-Pumped Solid State/fs)

Laser	Wavelength (nm)	Power Meter	Power Sensor
Rapid FX	1030	FieldMaxII-TO	PM150-50C
Monaco fs (20 to 60W)	517, 1035	FieldMaxII-TO	PM150-50C
Fidelity HP	1040	FieldMaxII-TO	PM30, PM150-50C
Fidelity-2	1070	FieldMaxII-TO	PM10
OPerA Solo Ultrafast	1140 to 1600	FieldMaxII-TO	PM10 or PS10*
OPerA-F	650 to 900	FieldMaxII-TO	PM30

Ultrafast Lasers for Science

Ultrafast Oscillator	Wavelength (nm)	Power Meter	Power Sensor
Mantis	800	FieldMaxII-TO	PM10 or PS10*
Micra	750 to 860	FieldMaxII-TO	PM10 or PS10*
Mira	700 to 980	FieldMaxII-TO	PM10
Mira 900	700 to 980	FieldMaxII-TO	PM10
Mira HP	700 to 980	FieldMaxII-TO	PM10
Vitara	755 to 860	FieldMaxII-TO	PM10 or PS10*
Vitesse	800	FieldMaxII-TO	PM10 or PS10*
Chameleon	680 to 1600	FieldMaxII-TO	PM10
Fidelity-2	1070	FieldMaxII-TO	PM10

* The PS10 is recommended when making higher resolution or low power measurements.

Measurement Products for Use with Coherent Lasers

Matrix of Recommendations*

Ultrafast Lasers for Science

Ultrafast Amplifier	Wavelength	Power Meter	Power Sensor	Energy Meter	Energy Sensor
Astrella	800 nm	FieldMaxII-TO	PM10	LabMax-TOP	J-25MT-10KHZ
Evolution-15, -30	527 nm	FieldMaxII-TO	PM30	LabMax-TOP	J-25MT-10KHZ + med heat sink
Evolution-45, -HE	527 nm	FieldMaxII-TO	PM150		
Hidra	800 nm	FieldMaxII-TO	PM10V1	FieldMaxII-TOP	J-50MB-YAG
Legend Elite (all configurations)	770 to 845 nm	FieldMaxII-TO	PM10	LabMax-TOP	J-25MT-10KHZ + med heat sink
Legend Elite Cryo PA	800 nm	FieldMaxII-TO	PM30	LabMax-TOP	J-25MT-10KHZ + med heat sink
Libra (all configurations)	800 nm	FieldMaxII-TO	PM10	LabMax-TOP	J-25MT-10KHZ
RegA	480 nm to 10 µm	FieldMaxII-TO	PS10		

Industrial Laser Machines & Systems

Laser Cutting Systems	Wavelength (nm)	Power Meter	Power Sensor
META 1.5C, 2C		FieldMaxII-TO	PM1K
META 10C, 4C		FieldMaxII-TO	PM3K
MPS Family	see laser type		
StarCut Tube	see laser type		
UW1200, 150RT	see laser type		
Laser Marking Systems	**Wavelength (nm)**	**Power Meter**	**Power Sensor**
CombiLine	see laser type		
LabelMarker	see laser type		
EasyMark F20, F30	1064, 1070 nm	FieldMaxII-TO	PM30
EasyMark F50	1070 nm	FieldMaxII-TO	PM150-50C
Laser Welding Systems	**Wavelength (nm)**	**Power Meter**	**Power Sensor**
Desktop		SSIM	PMP HP
XE-Power		SSIM	PMP HP
Multi-Purpose Laser Systems	**Wavelength (nm)**	**Power Meter**	**Power Sensor**
MPS Family	see laser type		
ELA			
VYPER Series	308 nm	LabMax-TO	PM1KX-100

Model Name Index

Model Name	Page Number
1000:1 Attenuator	63, **76**
1.035-40M Adapter Ring	**56**, **77**
Barrel Set	**119**
BCUBE	**118-119**, 123
BeamFinder	8, **44**, 58, **62**, **106**
BeamMaster	108, **121-123**
BeamView Analyzer	108, 109, **112-117**, 120
BIP-12F (1:1)	**120**
BIP-12F (2:1)	**120**
BIP-5000SPL	**120**
BIP-5000Z	**120**
C-VARM	**118-119**
Damage Test Slides	**101**
FC/PC-Type Connector	**56, 77**
FieldMate	8, 9, **21**, 23, 63, 76
FieldMaxII-P	8, 9, **19-20**, 79
FieldMaxII-TO	8, 9, **19-20**, 23, 126, 127, 128, 129
FieldMaxII-TOP	8, 9, **19-20**, 23, 25, 79, 103, 128, 129
J100 Energy Sensor	**103**
J-10MB-HE	81, 82, 83, **86**, **93**, 127
J-10MB-LE	79, 80, 81, 82, 83, **86**, **93**
J-10MT-10KHZ	8, 79, 81, 82, 83, **87**, **94**, 127, 128
J-10SI-LE	80, **98**, **99**
J-10SI-HE	80, 82, 83, **91**, 92, **98**
J-10GE	8, 79, 80, 82, 83, **98**, 99
J-10Ge-LE	**91**
J-25MB-HE	81, 82, 83, **86**, **93**
J-25MB-LE	81, 82, 83, **86**, **93**
J-25MT-10KHZ	8, 79, 81, 82, 83, **87**, **94**, 128, 129
J-25MUV-193	80, 81, 82, 83, **90**, **97**, 128
J-25MUV-248	80, 81, 82, 83, **97**, 128
J-50MB-HE	81, 82, 83, **86**, **93**
J-50MB-IR	80, 81, 82, 83, **89**, **96**
J-50MB-LE	81, 82, 83, **86**, **93**
J-50MB-YAG-1528	**88**, **95**
J-50MB-YAG-1535	**88**, **95**
J-50MB-YAG-1561	**95**
J-50MB-YAG	23, 80, 81, 82, 83, **88**, 89, **95**, 128, 129
J-50MT-10KHZ	8, 23, 79, 81, 82, 83, **87**, **94**
J-50MUV-193	80, 81, 82, 83, **90**, **97**, 128
J-50MUV-248	80, 81, 82, 83, **90**, **97**, 128
J-Power Pro Energy Sensor Adapter	**101**

Model Name	Page Number
LabMax-Pro	8, 9, **10-13**, 23, 26, 28
LabMax-Pro Mobile App	**14-15**
LabMax-TO	8, 9, **16-18**, 25, 129
LabMax-TOP	8, 9, **16-18**, 23, 25, 79, 94, 98, 99, 103, 126-129
LabMax-TOP w/GPIB	8, **16-18**
Large EnergyMax Heat Sink	**100**
LaserCam-HR II	**109-110**
LaserCam-HR II UV	**109-110**
LaserCam-HR-InGaAs	**109-110**
LaserCheck	8, **22**
LM-10	38, 40, **41**, 56, 58, **59**, 77
LM-100	**42**, 56, 58, **60**, 77
LM-1000	**44**, 58, **62**
LM-150 FS	58, **61**, 77
LM-150 LS	**42**, 58, **61**, 77
LM-2 IR	57, **63**, 76
LM-2 UV	57, **62**
LM-2 VIS	57, **63**, 76
LM-20	**42**, 56, 58, **61**, 77
LM-200	**43**, 56, 58, **60**, 77
LM-2500	58, **62**
LM-3	38, **41**, 56, 58, **59**, 77
LM-45	38, **41**, 56, 58, **59**, 77
LM-5000	**44**, 58, **62**
Medium EnergyMax Heat Sink	**100**
OP-2 IR	57, **63**, 76
OP-2 UV	57, **63**
OP-2 VIS	23, 57, **63**, 76
PM10	23, 25, **49**, 57, **65**, 126, 127, 128, 129
PM100-19C	**51**, 57, **66**
PM10-19A	58, **105**, **107**
PM10-19B	58, **105**, **107**
PM10-19C	25, **51**, 52, 57, **67**
PM10V1	58, **71**, 129
PM10X	**50**, 57, **72**, 126, 127, 128
PM150	25, 57, **66**, 126, 127, 129
PM150-19A	58, **105**, **107**
PM150-19B	58, **105**, **107**
PM150-19C	**51**, 52, 57, **67**
PM150-50	23, **53**, 57, **66**, 126
PM150-50A	58, **105**, **107**
PM150-50B	58, **106**, **107**

Model Name Index

Model Name	Page Number
PM150-50C	25, **51**, 52, 57, **67**, 128, 129
PM150-50XB	58, **106**, **107**
PM150-50XC	25, **55**, 57, **73**, 128
PM150X	57, **73**, 128
PM1K	**54**, 58, **69**, 126, 127, 129
PM1K-100	58, **70**
PM1K-36B	58, **106**, **107**
PM1K-36C	**53**
PM1KX	**75**, 128
PM1KX-100	**55**, **75**, 129
PM2	**49**, 57, **65**
PM200F-19	57, **68**
PM200F-50	57, **68**
PM200F-50X	57, **74**
PM2X	**50**, 57, **72**
PM3	**46**, 57, **64**
PM30	23, **49**, 57, **65**, 126, 127, 128, 129
PM300	57, **67**, 126
PM300F-19	57, **68**, 126
PM300F-50	57, **68**
PM300F-50X	57, **74**, 128
PM30V1	58, **71**
PM30X	**50**, 57, **72**, 127, 128
PM3K	**54**, 58, **69**, 129
PM3K-100	58, **70**
PM3Q	**46**, 57, **64**
PM5K	**54**, 58, **69**, 126
PM5K-100	**55**, 58, **70**, 126
PM5K-200	58, **70**
Posts and Stands	**77**, **100**
Power Supplies	**23**
PowerMax-Pro	5, 7, 8, 9, 11, 12, 13, 14, 15, **26-30**, 101
PowerMax-Pro 150 BB	**29**
PowerMax-Pro 150 BB Nano	**29**
PowerMax-Pro 150 HD	**29**
PowerMax-Pro 150 HD Nano	**29**
PowerMax-Pro 150F BB	**30**
PowerMax-Pro 150F HD	**30**
PowerMax-Pro 150F Nano	**30**
PMP 1 kW	**31**
PMP 3 kW	**31**
PowerMax-Pro HP	**33**

Model Name	Page Number
PowerMax-Pro USB/RS 150 BB	**36**
PowerMax-Pro USB/RS 150F BB	**36**
PowerMax-Pro USB/RS 150 HD	**35**
PowerMax-Pro USB/RS 150F HD	**35**
PowerMax-Pro USB/RS 150 HD Nano	**35**
PowerMax-Pro USB/RS 150F HD Nano	**35**
PowerMax-Pro USB/RS HP 2K	**37**
PS10	25, **45**, 46, 56, 57, **64**, 77, 126, 127, 128, 129
PS10Q	25, **45**, 57, **64**
PS19	23, 25, **45**, 46, 57, **64**
PS19Q	25, **45**, 57, **64**
PS-FC-Type Connector	**56**, **77**
PS-SMA-Type Connector	**56**, **77**
Rechargeable Batteries	**23**
Small EnergyMax Heat Sink	**100**
SMA-Type Connector	**56**, **77**
Soft Carrying Case	18, 20, **23**
Thermal SmartSensor Adapter	8, **76**
UV-BCUBE	**118-119**
UV/VIS	40, **47**, 48
UV C-VARM	**118-119**
VARM	**118-119**
Wand UV/VIS	**47**
Wand UV/VIS Adapters	**56**

How to Contact Us

Contact Us by Phone

Coherent, Inc.
USA: (800) 343-4912 or (408) 764-4042
Europe: +49 6071 968 0

Contact Us by Email

Laser Products: tech.sales@coherent.com

Laser Measurement: lmc.sales@coherent.com

Service: product.support@coherent.com

Additional Regional Contacts

www.coherent.com/company/contact

Doing Business with Coherent

Visit Our Website for Current Terms and Conditions of Sale

All Coherent product names are trademarks of Coherent, Inc.
*All products indicated by an asterisk are registered trademarks of their respective companies.

Notes

Notes

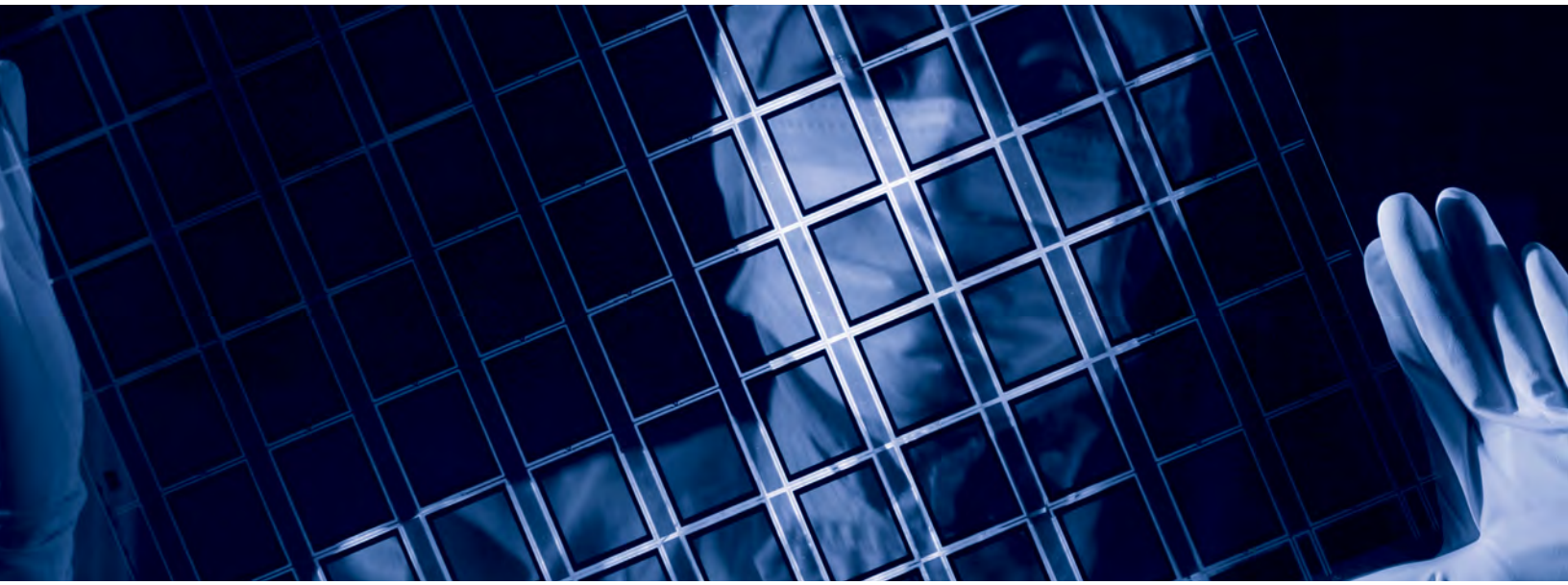

Coherent, Inc.,
5100 Patrick Henry Drive Santa Clara, CA 95054
p. (800) 527-3786 | (408) 764-4983
f. (408) 764-4646

tech.sales@coherent.com **www.coherent.com**

Printed in the U.S.A. MC-002-15-0M0119 Copyright ©2019 Coherent, Inc.