NOTES:

1. SUBSTRATE:
   FUSED SILICA

2. SURFACE S2 TO BE PARALLEL TO S1 TO WITHIN < 10 ARCMIN

3. COATING (APPLY ACROSS COATING APERTURE)

   S1: R(AVG) >99.8% @ 725 - 1000nm @ 45° AOI (P-POLARIZATION)
   -70fs² @ 725 - 1000nm (P-POLARIZATION)

   S2: NONE

   DAMAGE THRESHOLD: 0.2 J/cm² @ 800nm, 50fs, 100µm BEAM DIAMETER

4. FINE GRIND SURFACE

5. ROHS COMPLIANT

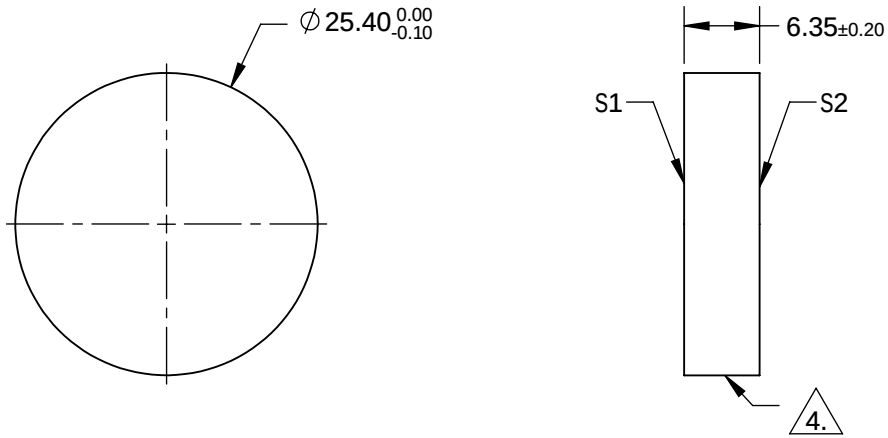

FOR INFORMATION ONLY:
DO NOT MANUFACTURE PARTS TO THIS DRAWING

SPECIFICATIONS SUBJECT TO CHANGE WITHOUT NOTICE
DIMENSIONS ARE FOR REFERENCE ONLY

	S1	S2
SHAPE	PLANO	PLANO
IRREGULARITY (P-V) @632.8nm	λ/10	N/A
CLEAR APERTURE	Ø20.32	N/A
BEVEL	PROTECTIVE AS NEEDED	PROTECTIVE AS NEEDED

Edmund Optics®

THIRD ANGLE PROJECTION	TITLE	25.4mm Dia., 45°, 725 - 1000nm ULTRAFAST CHIRPED MIRRORS	
ALL DIMS IN mm	DWG NO	12421	SHEET 1 OF 1